1645 Lemonwood Dr.
Santa Paula, CA 93060 USA
Telephone: (877) 432-6627
dannmar.com

Four-Post Lifts

Installation and Operation Manual

Manual P/N 5900246 — Manual Revision B2 — April 2022

Models:

- D4-12
- D4-12A

D4-12A Shown.

DANGER

IMPORTANT SAFETY INSTRUCTIONS, SAVE THESE INSTRUCTIONS! Read this manual thoroughly before installing, operating, servicing or maintaining this Lift. Failure to follow the instructions and safety precautions in this manual can result in serious injury or death. Make sure all other operators also read this manual. Keep the manual near the product for future reference. ***By proceeding with installation and operation, you agree that you fully understand the contents of this manual and assume full responsibility for product use.***

Manual. D4-12 Series Four-Post Lifts, *Installation and Operation Manual*, Manual P/N 5900246, Manual Revision B2, Released April 2022.

Copyright. Copyright © 2022 by BendPak Inc. All rights reserved. You may make copies of this document if you agree that: you will give full attribution to BendPak Inc., you will not make changes to the content, you do not gain any rights to this content, and you will not use the copies for commercial purposes.

Trademarks. Dannmar and the Dannmar logo are registered trademarks of BendPak Inc. All other company, product, and service names are used for identification only. All trademarks and registered trademarks mentioned in this manual are the property of their respective owners.

Limitations. Every effort has been made to make sure complete and accurate instructions are included in this manual. However, product updates, revisions, and/or changes may have occurred since this manual was published. BendPak reserves the right to change any information in this manual without incurring any obligation for equipment previously or subsequently sold. BendPak is not responsible for typographical errors in this manual. You can always find the latest version of the **manual for your product on the Dannmar website**.

Warranty. The Dannmar warranty is more than a commitment to you: it is also a commitment to the value of your new product. Contact your nearest Dannmar dealer or visit **www.dannmar.com/support/warranty/** for full warranty details.

Safety. Your product was designed and manufactured with safety in mind. However, your safety also depends on proper training and thoughtful operation. Do not install, operate, maintain, or repair the unit without reading and understanding this manual and the labels on the unit; ***do not use your Lift unless you can do so safely!***

Owner Responsibility. In order to maintain your product properly and to ensure everyone's safety, it is the responsibility of the product owner to read and follow these instructions:

- Follow all installation, operation, and maintenance instructions.
- Make sure product installation conforms to all applicable local, state, and federal codes, rules, and regulations, such as state and federal OSHA regulations and electrical codes.
- Read and follow all safety instructions; keep them readily available for operators.
- Make sure all operators are properly trained, know how to safely operate the unit, and are properly supervised.
- Do not operate the product until you are certain that all parts are in place and operating correctly.
- Carefully inspect the product on a regular basis and perform all maintenance as specified.
- Service and maintain the unit with approved replacement parts only.
- Keep all instructions permanently with the product and make sure all labels are clean and visible.
- **Only use the Lift if it can be used safely!**

Unit Information. Enter the Model Number, Serial Number, and the Date of Manufacture from the label on your unit. This information is required for part or warranty issues.

Model: _____

Serial: _____

Date of Manufacture: _____

Table of Contents

Introduction 3
Shipping Information 3
Safety Considerations 4
Optional Product 6
Components 7
Specifications 9
Installation Checklist 11
Installation 12
Operation 60
Maintenance 63
Troubleshooting 65
Wiring Diagrams 66
Labels 67
Parts Drawings 70
Maintenance Logs 79

Introduction

This manual describes the following Dannmar Four-Post Lifts:

- **D4-12**. Four-Post Lift that raises Vehicles up to 12,000 lbs. (5,443 kg).
- **D4-12A**. The Alignment version of the D4-12.

This manual is ***mandatory reading for all users of the D4-12 Series***, including anyone who installs, uses, maintains, services, repairs, or wants to know more about them. *Keep this manual on or near the equipment* so that anyone who uses it or services it can read it. If you are having issues with your unit, refer to the **Troubleshooting** section of this manual for assistance.

Shipping Information

Your equipment was carefully checked before shipping. Nevertheless, you should thoroughly inspect the shipment ***before*** you sign to acknowledge that you received it.

When you sign a bill of lading, it tells the carrier that the items on the invoice were received in good condition. *To protect yourself, do not sign until **after** you have inspected the shipment.* If any of the items listed on the bill of lading are missing or are damaged, do not accept the shipment until the carrier makes a notation on the bill of lading that lists the missing and/or damaged goods.

If you discover missing or damaged goods ***after*** you receive the shipment and have signed the bill of lading, notify the carrier at once and request the carrier to make an inspection. If the carrier will not make an inspection, prepare a signed statement to the effect that you have notified the carrier (on a specific date) and that the carrier has failed to comply with your request.

It is difficult to collect for loss or damage after you have given the carrier a signed bill of lading. If this happens to you, file a claim with the carrier promptly. Support your claim with copies of the bill of lading, freight bill, invoice, and photographs, if available. ***Our willingness to assist in helping***

you process your claim does not make us responsible for collection of claims or replacement of lost or damaged materials.

Safety Considerations

Read this entire manual carefully before installing or using the product. Do not install or operate the product until you are familiar with all operating instructions and warnings. Do not allow anyone else to operate it until they are familiar with all operating instructions and warnings.

Read and follow the warnings and instructions on the labels on the product. Contact BendPak at **(800) 253-2363** extension 191, or email **support@dannmar.com** if you need replacement labels or a replacement manual.

⚠ **WARNING** **California Proposition 65**. This product can expose you to chemicals including styrene and vinyl chloride which are on the list of over 900 chemicals identified by the State of California to cause cancer, birth defects or reproductive harm. Always use this product in accordance with BendPak Dannmar's. For more information, visit **www.p65warnings.ca.gov**.

Important Safety Instructions

When using your equipment, basic safety precautions should always be followed, including:

IMPORTANT SAFETY INSTRUCTIONS! SAVE THESE INSTRUCTIONS!

1. Read all instructions.
2. Care must be taken as burns can occur from touching hot parts.
3. Do not operate equipment with a damaged cord or if the equipment has been dropped or damaged – until it has been examined by a qualified service person.
4. Do not let a cord hang over the edge of a table, bench, or counter or come in contact with hot manifolds or moving fan blades.
5. If an extension cord is necessary, a cord with a current rating equal to or more than that of the equipment should be used. Cords with a current rating less than the equipment may overheat. Care should be taken to arrange the cord so that it will not be tripped over or pulled.
6. Always unplug the equipment from the electrical outlet when not in use. Never use the cord to pull the plug from the outlet. Grasp the plug and pull to disconnect.
7. Let the equipment cool completely before putting away. Loop cord loosely around equipment when storing.
8. To reduce the risk of fire, do not operate in the vicinity of open containers of flammable liquids (gasoline).
9. Adequate ventilation should be provided when working on operating internal combustion engines.
10. Keep hair, loose clothing, fingers, and all parts of body away from moving parts.
11. To reduce the risk of electric shock, do not use on wet surfaces or expose to rain.
12. Use only as described in this manual. Use only BendPak recommended attachments.

13. ALWAYS WEAR SAFETY GLASSES. Everyday eyeglasses only have impact resistant lenses, they are not safety glasses.
14. To reduce the risk of injury, close supervision is necessary when this product will be used around children.
15. To reduce the risk of injury, ***never*** attempt to lift more than the rated capacity. Refer to loading instructions.
16. The Lift uses electrical energy; if your organization has Lockout/Tagout policies, make sure to implement them after connecting the Lift to a power source.
17. Refer to markings for proper load on electrical receptacles.
18. Only operate your Lift between temperatures of 41°F to 104°F (5°C to 40°C).
19. The Lift should ***only*** be operated by authorized personnel. Keep children and untrained personnel away from the Lift.
20. Do not make any modifications to the Lift; this voids the warranty and increases the chances of injury or property damage.
21. Do not use the Lift while tired or under the influence of drugs, alcohol, or medication.
22. Consider the work environment. Keep the work area clean. Cluttered work areas invite injuries. Keep areas well lit.
23. **Always** make sure the Lift is secured on Safety Locks before attempting to work on or near a Vehicle.
24. Make a thorough inspection of the product at least once a year. Replace any damaged or severely worn parts, decals, or warning labels. Replace worn or damaged parts with BendPak or BendPak approved parts and assemblies only.
25. BendPak recommends referring to the ANSI/ALI ALIS Standard *Safety Requirements for Installation and Service* for more information about safely installing, using, and servicing your Lift.
26. D4-12 Series Lifts are Four-Post Service Lifts. ***Use them only for their intended purpose.***
27. You ***must*** wear OSHA-approved (publication 3151) personal protective equipment at all times when installing, using, maintaining, or repairing the Lift. Leather gloves, steel-toed work boots, eye protection, back belts, and hearing protection are ***mandatory***.
28. Keep loads balanced on the Lift. Clear the area immediately if a Vehicle is in danger of falling off the Lift.
29. Do **not** make any modifications to the Lift. Modifications void the warranty and increases the chances of injury or property damage. Do not modify any safety-related features in any way.
30. Make sure all operators read and understand this Installation and Operation Manual. Keep the manual near the Lift at all times.
31. While handling a Hydraulic Cylinder or a Hydraulic Hose, ***always*** wear gloves. In rare cases, a needle-like stream of hydraulic fluid (even at low pressure) can penetrate fingers, hands, or arms; such a puncture can feel like a bite, electric shock, or a prick. While it may seem like a minor issue, any amount of Hydraulic Fluid injected into the human body is a serious issue. Anyone suffering such a puncture wound should be ***immediately*** taken to a hospital emergency room to determine the extent of the injury. Explain the circumstances of the injury to the attending physician, including what kind of Hydraulic Fluid was involved. Do not assume a puncture wound that could have been caused by Hydraulic Fluid is a minor issue; it could be life threatening.

32. Make an inspection of the Lift ***before*** using it. Check for damaged, worn, or missing parts. Do not use it if you find any of these issues. Instead, take it out of service, then contact an authorized repair facility, your dealer, or BendPak at **(877) 432-6627** or **support@BendPak.com**.
33. Use only as described in this manual.
34. Use only manufacturer's recommended attachments.
35. Make sure all operators read and understand this Installation and Operation Manual. ***Keep the manual near the Lift at all times.***
36. Do not operate equipment with a damaged cord or if the equipment has been dropped or damaged—until it has been examined by a qualified service person. Make an inspection of the Lift ***before*** using it. Check for damaged, worn, or missing parts. Do not use it if you find any of these issues. Instead, take it out of service, then contact an authorized repair facility, your dealer, or BendPak at **(800) 253-2363** or email **support@dannmar.com**.
37. BendPak Dannmar recommends making a ***thorough*** inspection of the product at least once a year. Replace any damaged or severely worn parts, decals, or warning labels.

Save these instructions!

Symbols

Following are the symbols used in this manual:

⚠ **DANGER**	Calls attention to an immediate hazard that **will** result in death or severe injury.
⚠ **WARNING**	Calls attention to a hazard or unsafe practice that **could** result in death or severe personal injury.
⚠ **CAUTION**	Calls attention to a hazard or unsafe practice that could result in minor personal injury, product damage, or property damage.
NOTICE	Calls attention to a situation that, if not avoided, could result in product or property damage.
Tip	Calls attention to information that can help you use your product better.

Liability Information

BendPak Inc. assumes **no** liability for damages resulting from:

- Use of the equipment for purposes other than those described in this manual.
- Modifications to the equipment without prior, written permission from BendPak.
- Injury or death caused by modifying, disabling, overriding, or removing safety features.
- Damage to the equipment from external influences.
- Incorrect operation of the equipment.

Components

The main components of your Lift include:

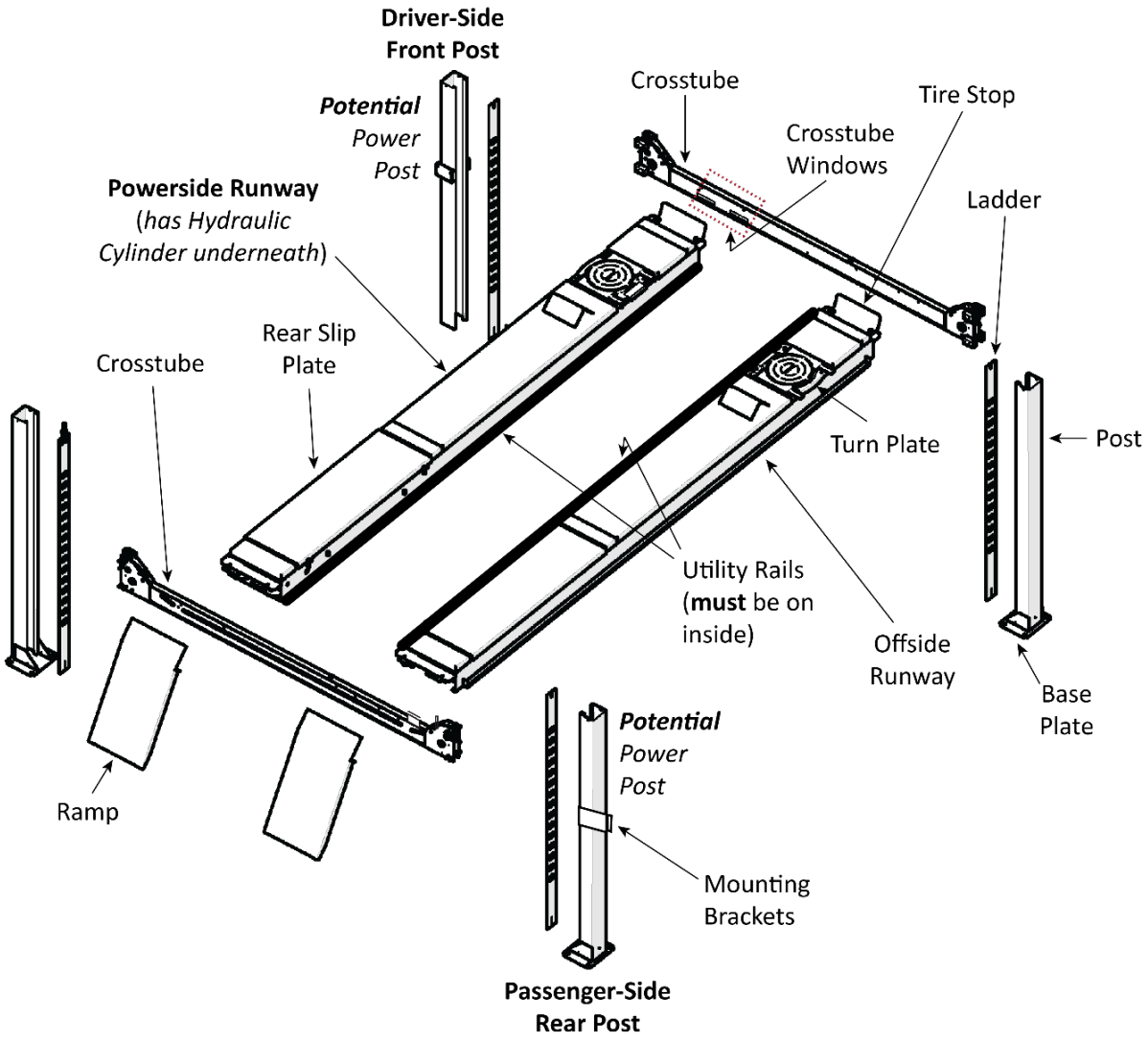

D4-12A model shown. Drawing shows the two possible Power Post locations; only one Post has the Brackets for mounting the Power Unit. Turn Plates on the D2-12A only. Not all components are shown.

Optional Accessories

There is an additional product you can purchase for use with your Lift:

- **Rolling Jack**. A Rolling Jack raises the wheels of a Vehicle off the Runways of a Lift, such as a D4-12 or D4-12A, making it much easier to perform service such as brake jobs and suspension work while the Vehicle is still on the Lift.

  You can raise two wheels off the Runways if you have one Rolling Jack. It takes two Rolling Jacks to raise all four wheels off the Runways at the same time.

  All D4-12 models take 6,000 lb. capacity Rolling Jacks. Refer to the **Rolling Jack pages on the Dannmar website** for more information.

The main components of your Lift include:

- **Power Post**. The Post that holds the Power Unit. ***The Power Post can be in either of two locations***. You can tell the Power Post from the other Posts because it has two Mounting Brackets on it. Mount the Power Unit on one of the two Mounting Brackets.
- **The other three Posts**. These Posts are interchangeable.
- **Power Unit**. An electric/hydraulic unit that connects to an electric power source and then provides Hydraulic Fluid to the Hydraulic Cylinder that raises and lowers the Runways.
- **Powerside Runway**. On the same side as the Power Post. The Powerside Runway has the Hydraulic Cylinder and the Lifting Cables under them. The Powerside Runway ***must*** go next to the Power Post.
- **Offside Runway**. The other Runway. It does not have a Hydraulic Cylinder or Lifting Cables under.
- **Flex Tube**. *Not shown*. A flexible, black tube that attaches to an opening on the Powerside Runway on one end and to the bottom of the Flex Tube Bracket Plate (near the Power Unit) on the other end. Used for routing the Air Line, Return Line, and Hydraulic Hose to the Power Unit.
- **Utility Rails**. Hold the optional Rolling Jacks. Utility Rails ***must*** go on the inside of the Lift.
- **Crosstubes**. Go at each end of the Lift. The Crosstubes are hollow; the Lifting Cables that raise and lower the Runways are routed through the Crosstubes.
- **Drive-up Ramps**. One for each Runway. Use them to drive onto and off of the Runways.
- **Tire Stops**. Located at the Front of the Lift, Tire Stops prevent the Vehicle's Front Tires from going any further forward. Additionally, we strongly recommend chocking the Vehicle's Rear Tires.
- **Safety Locks**. Once engaged, they hold the Runways in position, even if the power goes out or there is a leak in the Hydraulic Hoses. ***Only leave the Runways on the ground or engaged on a Safety Lock.***
- **Pushbutton Air Valve**. Includes a Pushbutton that moves the Safety Locks away from the Ladder so that they do not engage as you lower the Runways. Used only to lower the Runways. Usually located next to the Power Post.
- **Ladders**. Part of the Safety Lock System installed at the back of each Post, somewhat resembles a Ladder.

Specifications

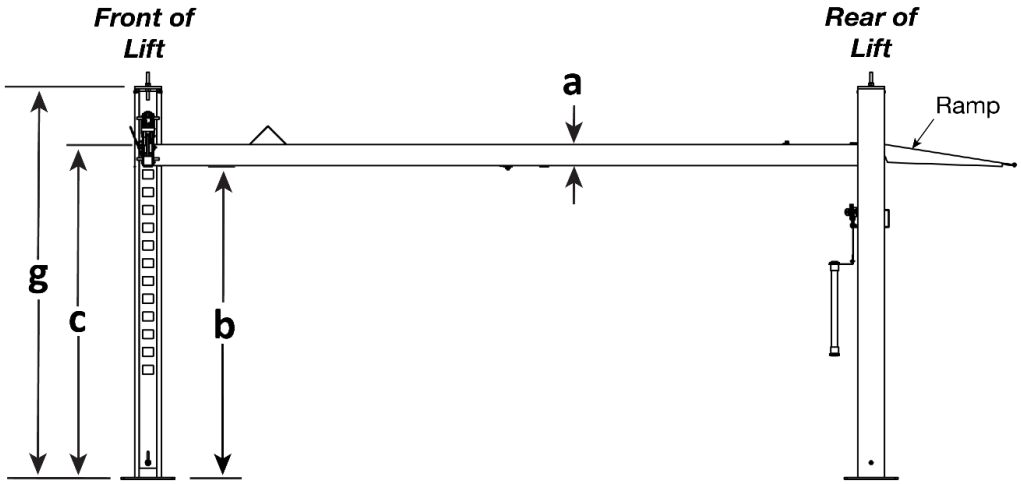

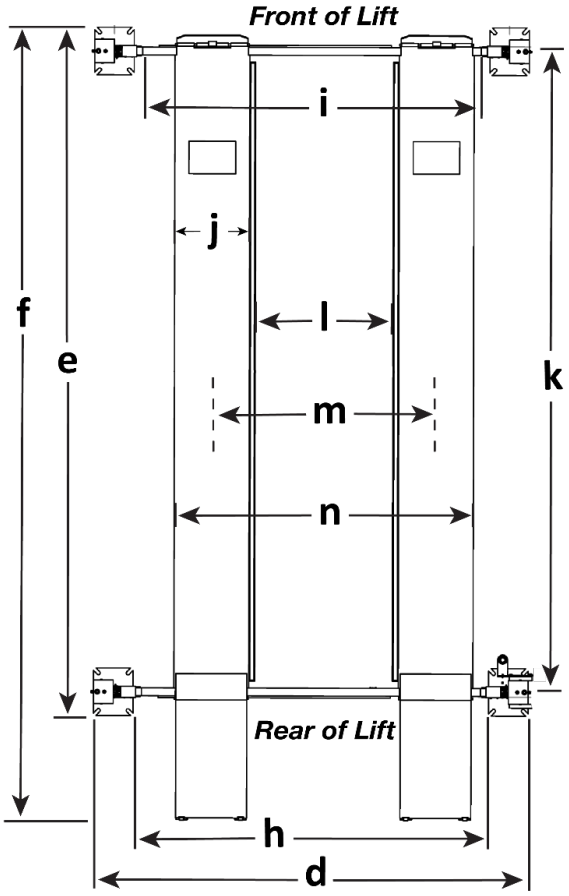

Model	D4-12	D4-12A
Lifting Capacity	12,000 lbs / 5,443 kg	
Max capacity at Front Axle	6,000 lbs / 2,721 kg	
Max capacity at Rear Axle	6,000 lbs / 2,721 kg	
a Fully lowered height	7.4" / 190 mm	9.4" / 240 mm
b Maximum rise	70.75" / 1,797 mm	
c Maximum lifting height	77.5" / 1,968 mm	79.25" / 2,019 mm
d Overall width[1]	126" / 3,196 mm	
e Outside length, Base Plates	205" / 5,207 mm	
f Overall length	233.5" / 5,930 mm	
g Height of post	92" / 2,338 mm	
h Distance between posts	116" / 2,942 mm	
i Drive-thru clearance	102.2" / 2,596 mm	
j Runway width	20" / 508 mm	
k Runway length	194.75" / 4,946 mm	
l Width between runways	34.5" (876 mm) Min. – 41.65" (1,058 mm) Max.	
m Runway centerline	57.5" (1,460 mm) Min. or 64.65" (1,642 mm) Max.	
n Outside edge of runways	77.5" (1,968 mm) Min. or 81.65" (2,150 mm) Max.	
o Inside Column to Ramp Edge	16.5” / (418 mm)	
Min. 4-Wheel Alignment	N/A	106" (9 feet) / 2,692 mm
Max. 4-Wheel Alignment	N/A	158.5" (13.3 feet) / 4,026 mm
Max. 2-Wheel Alignment	N/A	163.5" (13.8 feet) / 4,153 mm
Min. wheelbase @ rated capacity[2]	140" (11.8 feet) / 3,556 mm	
Min. wheelbase @ 75 capacity[2]	120" (10 feet) / 3,048 mm	
Min. wheelbase @ 50 capacity[2]	100" (8.4 feet) / 2,540 mm	
Min. wheelbase @ 25 capacity[2]	80" (6.8 feet) / 2,032 mm	
Safety Lock positions	15, spaced every 4" / 102 mm	
Maximum Operating Pressure	3,000 PSI	
PRV Setting	3,480	
Lifting time	60 seconds	
Motor	220 VAC, 60 Hz, 1 Ph (*special voltages available upon request*)	

[1] Overall Width is defined as the dimension outside to outside of the Baseplates. Use the Overall Width listed above for creating Chalk Lines.

[2] The Lift supports less weight than its rated capacity if the Vehicle’s wheelbase is shorter; this is because the wheels are closer to the middle of the Runways, where there is less strength. For example, the maximum weight allowed on the Lift for a Vehicle with a wheelbase of 100" is 50 percent of the Lift’s rated capacity (or 6,000 lbs. when the rated capacity is 12,000 lbs.).

Specifications subject to change without notice.

Installation Checklist

Following are the steps needed to install your Lift. Perform them in the order shown.

- ☐ 1. Review the safety rules.
- ☐ 2. Make sure you have the necessary tools.
- ☐ 3. Plan for Electrical work.
- ☐ 4. Select the installation location.
- ☐ 5. Check the Clearances.
- ☐ 6. Decide the Lift Orientation.
- ☐ 7. Unload and unpack the Lift components.
- ☐ 8. Create Chalk Line Guides.
- ☐ 9. Move the Posts into position.
- ☐ 10. Install the Crosstubes.
- ☐ 11. Read about Safety Locks.
- ☐ 12. Install the Ladders and Top Caps.
- ☐ 13. Raise the Crosstubes.
- ☐ 14. Secure the Ladders.
- ☐ 15. Removing the Sheaves.
- ☐ 16. Install the Runways.
- ☐ 17. Read about Reinstalling Cable Sheaves.
- ☐ 18. Route the Lifting Cables.
- ☐ 19. Working with Compression Fittings and Tubing.
- ☐ 20. Install the Air Line.
- ☐ 21. Install the Return Line.
- ☐ 22. Read about Hydraulic Contamination.
- ☐ 23. Read about Thread Sealants.
- ☐ 24. Install the Hydraulic Hose.
- ☐ 25. Install the Power Unit.
- ☐ 26. Install the Flex Tube Bracket Plate and Angle Plate.
- ☐ 27. Install the Flex Tube.
- ☐ 28. Install the Pushbutton Air Valve and connect the Air Lines.
- ☐ 29. Connect the Return Line.
- ☐ 30. Connect the Hydraulic Hose.
- ☐ 31. Connect to a power source (***Electrician required***).
- ☐ 32. Install the Power Disconnect Switch and Thermal Disconnect Switch (***Electrician required***).
- ☐ 33. About Effective Embedment.
- ☐ 34. Anchor the Posts.
- ☐ 35. Perform final leveling.
- ☐ 36. Install the Accessories.
- ☐ 37. Lubricate the Lift.
- ☐ 38. Test the Lift.
- ☐ 39. Review the final checklist.
- ☐ 40. Leave the Manual with the Owner/Operator.

Installation

The installation process takes multiple steps. Perform them in the order listed.

Read the entire Installation section before beginning the process; this gives you a better understanding of the process as a whole.

⚠ **WARNING** ***Only use the factory-supplied parts that came with your Lift***. If you use parts from a different source, you void your warranty and compromise the safety of everyone who installs or uses the Lift. If you are missing parts, visit **dannmar.com/support** or call **(877) 432-6627**.

Being Safe

While installing this equipment, your safety depends on proper training and thoughtful operation.

⚠ **WARNING** Do not install this equipment unless you have automotive Lift installation training. Always use proper lifting tools, such as a Forklift or Shop Crane, to move heavy components. Do not install this equipment without reading and understanding this manual and the safety labels on the unit.

Only fully trained personnel should be involved in installing this equipment. Pay attention at all times. Use appropriate tools and lifting equipment. Stay clear of moving parts.

BendPak recommends referring to the current version of the ANSI/ALI ALIS Standard *Safety Requirements for Installation and Service* for more information about safely installing, using, and servicing your Lift.

⚠ **WARNING** You ***must*** wear OSHA-approved (publication 3151) personal protective equipment at all times when installing, using, maintaining, or repairing the Lift: leather gloves, steel-toed work boots, eye protection, back belts, and hearing protection are ***mandatory***.

Using Tools

You may need some or all of the following tools:

- Rotary hammer drill or similar
- ¾ inch carbide bit (conforming to ANSI B212.15)
- Hammer, crow bar, and two sawhorses
- Four-foot level and 12-foot ladder
- Open-end wrench set, SAE and metric
- Socket and ratchet set, SAE and metric
- Hex key wrench set
- Medium crescent wrench, torque wrench, pipe wrench
- Chalk line
- Medium-sized flat screwdriver and needle-nose pliers
- Tape measure (25 feet or above)
- Forklift, Shop Crane, or heavy-duty rolling dolly

Planning for Electrical Work

You will need to have a licensed, certified Electrician available at some point in the installation.

⚠ **DANGER** All wiring ***must*** be performed by a licensed, certified Electrician in accordance with local and national electrical codes.

Notify your Electrician in advance so that they come prepared with an appropriate Power Cord with a Plug for connecting to the power source, a Power Disconnect Switch, and a Thermal Disconnect Switch. Refer to **Contacting the Electrician** for more information.

Your Electrician needs to:

- **Connect the Power Unit to an electrical power source**. An electric power source is required. The Power Unit comes with a pigtail for wiring to a power source. Have your Electrician remove the pigtail and wire from inside the Electrical Box on the Power Unit to a Power Cord and Plug or have them wire it directly into the electrical system at the Lift location protected by an appropriate circuit breaker.

  Note: Installing the Power Unit and connecting the Power Unit to the power source are *separate* procedures and are completed at different times in the installation process.

- **Install a Power Disconnect Switch**. Ensures you can quickly and completely interrupt electrical power to the Lift in the event of an electrical circuit fault, emergency situation, or when equipment is undergoing service or maintenance. Put it within sight and reach of the Lift operator.
- **Install a Thermal Disconnect Switch**. Ensures the equipment shuts down in the event of an overload or an overheated motor.

Note: The Power and Thermal Disconnect Switch are **not** included with the Lift.

Selecting a Location

When selecting the location for your Lift, consider:

- **Architectural plans**. Consult the architectural plans for your desired installation location. Make sure there are no issues between what you want to do and what the plans show.
- **Available space**. Make sure there is enough space for the Lift: front, back, sides, and above.
- **Overhead Clearance**. Check for overhead obstructions such as building supports, heaters, electrical lines, low ceilings, hanging lights, and so on. Use the maximum lifting height of your Lift plus the height of the tallest Vehicle you plan on raising to determine how much height you will need at the Lift location.
- **Power**. You need an appropriate power source for the Power Unit.
- **Outdoor installations**. ***Your Lift is approved for indoor installation and use only.*** Outdoor installation is prohibited.
- **Floor**. Only install the Lift on a flat, concrete floor; do not install on asphalt or any other surface. The surface must be level; do not install if the surface has more than three degrees of slope.

⚠ **WARNING** Installing your Lift on a surface with more than three degrees of slope could lead to injury or even death; only install the Lift on a level floor. If your floor is not level, consider making the floor level or using a different location.

- **Shimming**. If your concrete floor is not completely level, you can use Shims under the bases of the Posts, as needed, to level the Lift. To estimate your Shim requirements, use a transit level and targets to check for flatness. Use the provided Shims as necessary.

- **Multi-Lift installations**. In a Multi-Lift layout, there must be a *minimum* spacing of 5 inches from the edge of the Baseplates to the edge of the Baseplates on the next Lift.

⚠ **WARNING** Installing a Lift closer than 5 inches from the next Lift compromises the holding strength of the Anchor Bolts, putting anyone near the Lifts in danger.

NOTICE Do not shim a Post more than half an inch using the provided Shims and Anchor Bolts. A maximum shim of 2 inches is possible by ordering optional Shim Plates. Contact Dannmar at **(877) 432-6627**.

- **Concrete specifications**. Do not install the Lift within 6 inches of cracked or defective concrete. Make sure the concrete is at least 4.25 inches thick, 3,000 PSI, and cured for a minimum of 28 days.

⚠ **CAUTION** BendPak lifts are supplied with installation instructions and Concrete anchors that meet the criteria set by the current version of the American National Standard "Automotive Lifts – Safety Requirements for Construction, Testing, and Validation", ANSI/ALI ALCTV. You are responsible for any special regional structural and/or seismic anchoring requirements specified by any other agencies and/or codes such as the Uniform Building Code (UBC) and/or International Building Code (IBC).

Be sure to check your floor for the possibility of it being a ***post-tension slab***. In this case, you must contact the building architect ***before*** drilling. Using ground penetrating radar may help you find the tensioned steel.

⚠ **WARNING** Cutting through a tensioned Cable can result in injury or death. Do not drill into a post-tension slab unless the building architect confirms you are not going to hit tensioned steel or you have located it using ground penetrating radar. ***If colored sheath comes up during drilling, stop drilling immediately***.

Checking Clearances

Out of a concern for safety, a certain amount of clear space around the Lift is ***required***.

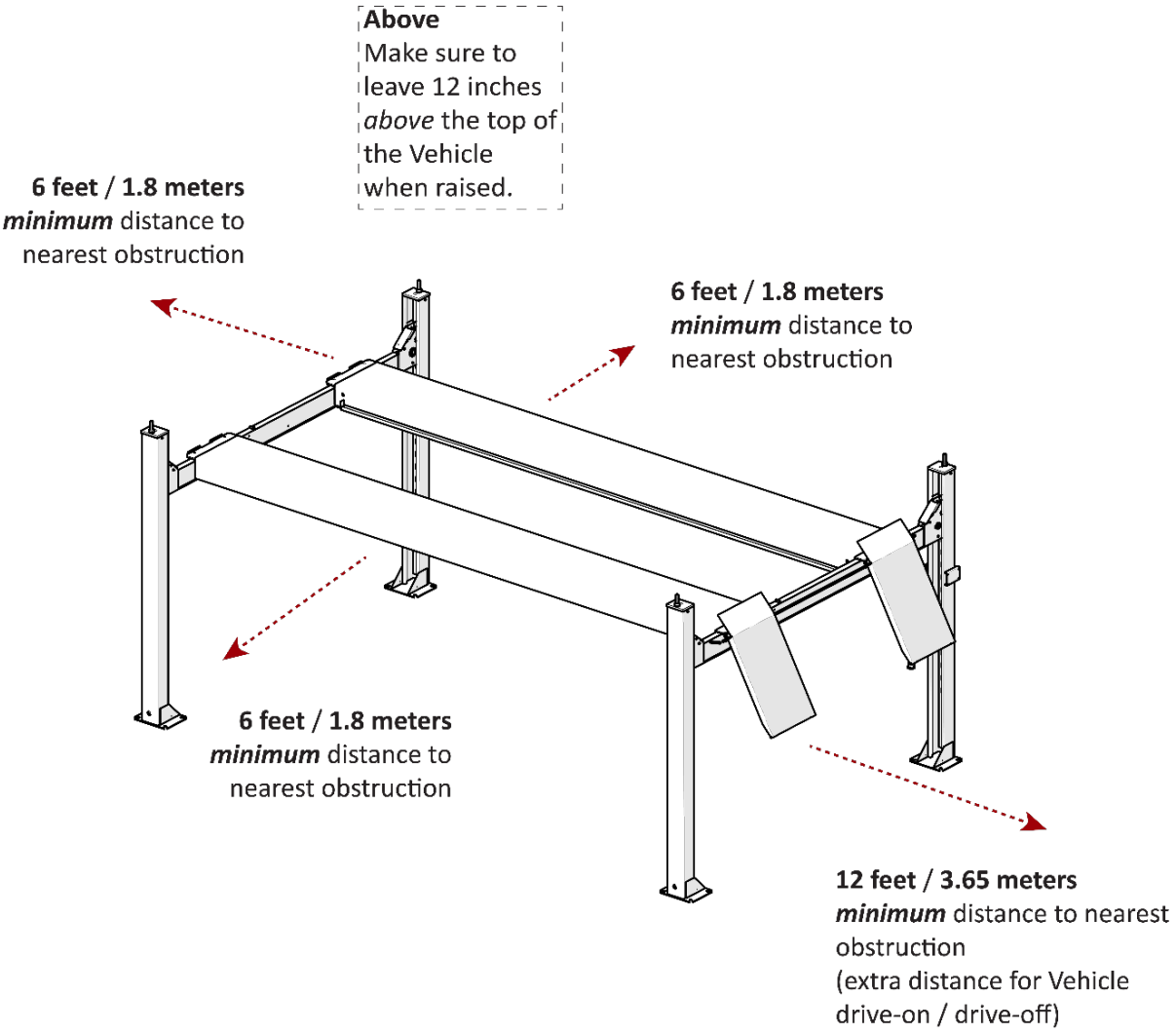

Usable Area

The strength of the Runways is reduced in the middle, so you ***must not*** put the Wheels of a Vehicle you are raising in this area. The same restriction applies to Rolling Jacks and Bottle-Jack Trays; they must ***not*** be used in this middle section of the Runways.

⚠ **CAUTION** Do not load Vehicles so the Wheels of the Vehicle are in the middle of the Runways or use Rolling Jacks or Bottle-Jack Trays in that area; it could permanently damage the Runways. Damage caused by this **unsupported** use of the Lift is ***not*** covered by the Warranty.

This will not impact your use of the Lift in the vast majority of cases, as the length of the wheelbases of the Vehicles you are raising put the Wheels in the Usable Areas.

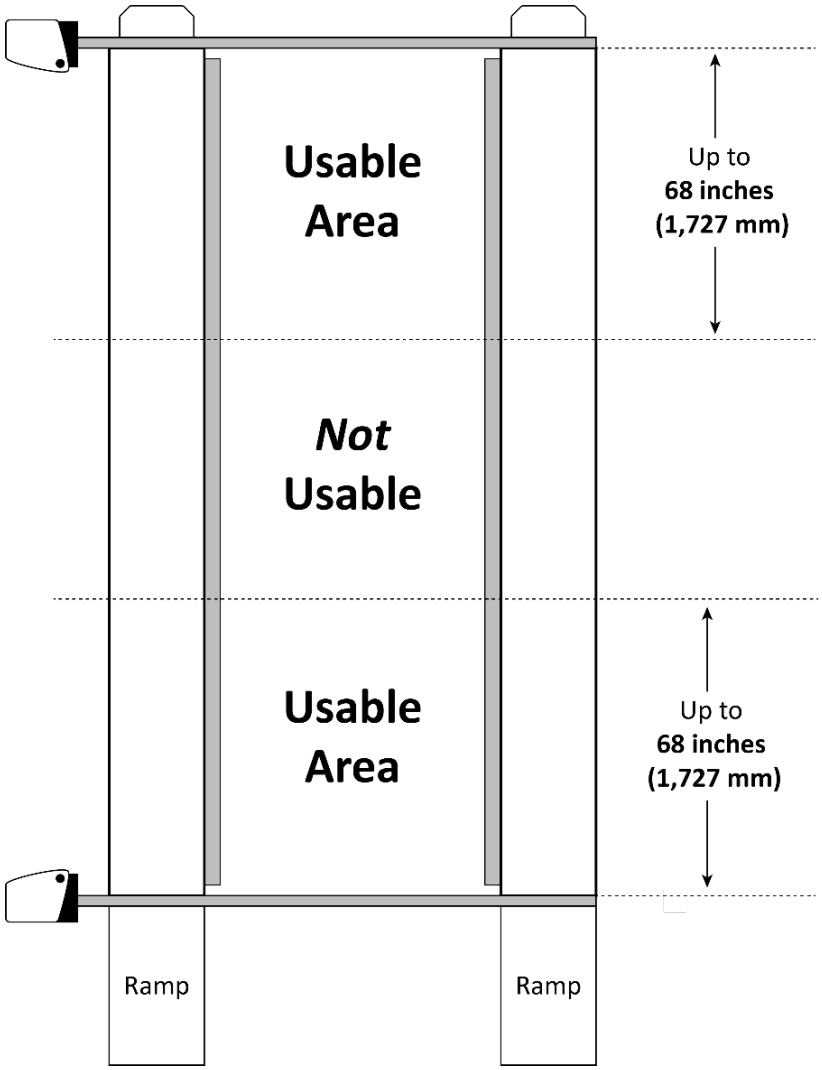

Top view. Drawing not necessarily to scale. Not all components shown.

For more information about the Dannmar Rolling Jacks, visit the **Rolling Jacks website page**.

Deciding the Lift Orientation

Before going any further, decide how you want to orient your Lift. This decision affects where you will place your Power Post and also the positioning of the Runways, which are ***not*** interchangeable.

The Powerside Runway ***must*** be installed next to the Power Post.

You can choose to position your Power Post at either the **Front Driver-Side** or the **Rear Passenger-Side**. The Drive-up Ramps are ***not*** affected by the Power Post location.

The drawings in this manual show the Power Post at the **Rear Passenger-Side**.

Important: Installers, you need to have the Lift owner make this decision no later than when moving the Posts into position.

Power Post Location: *Front Driver-side*

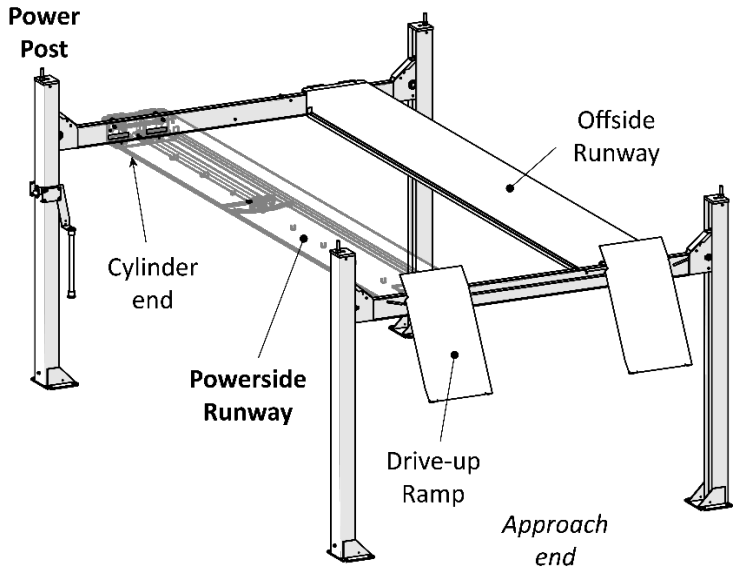

Power Post Location: *Rear Passenger-side*

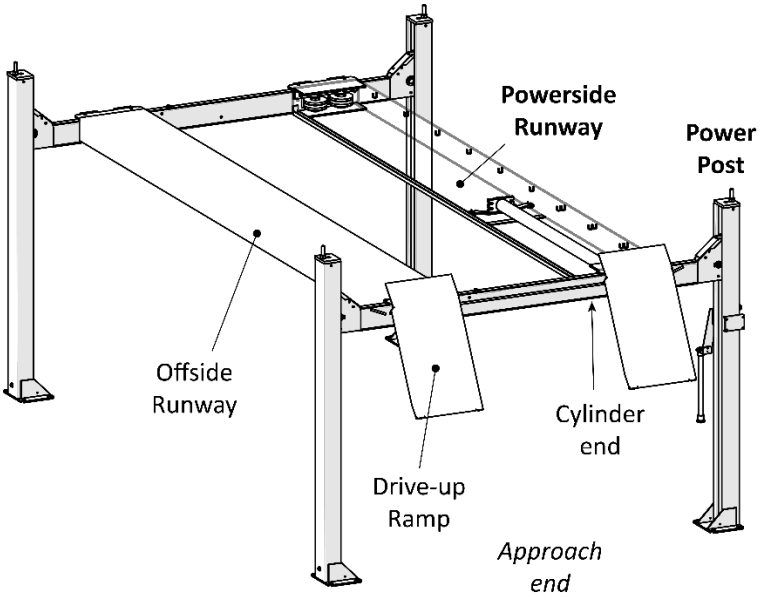

Creating Chalk Line Guides

Create the Chalk Line Guides so that the outside edges of all four Posts fit into the four corners created by the Chalk Line Guides.

See **Specifications** to determine the **Overall Width** and **Outside Length** values for your Lift.

Note: Do ***not*** use the ***Overall*** **Length** value; this includes the Ramps, which are not taken into consideration for creating Chalk Line Guides.

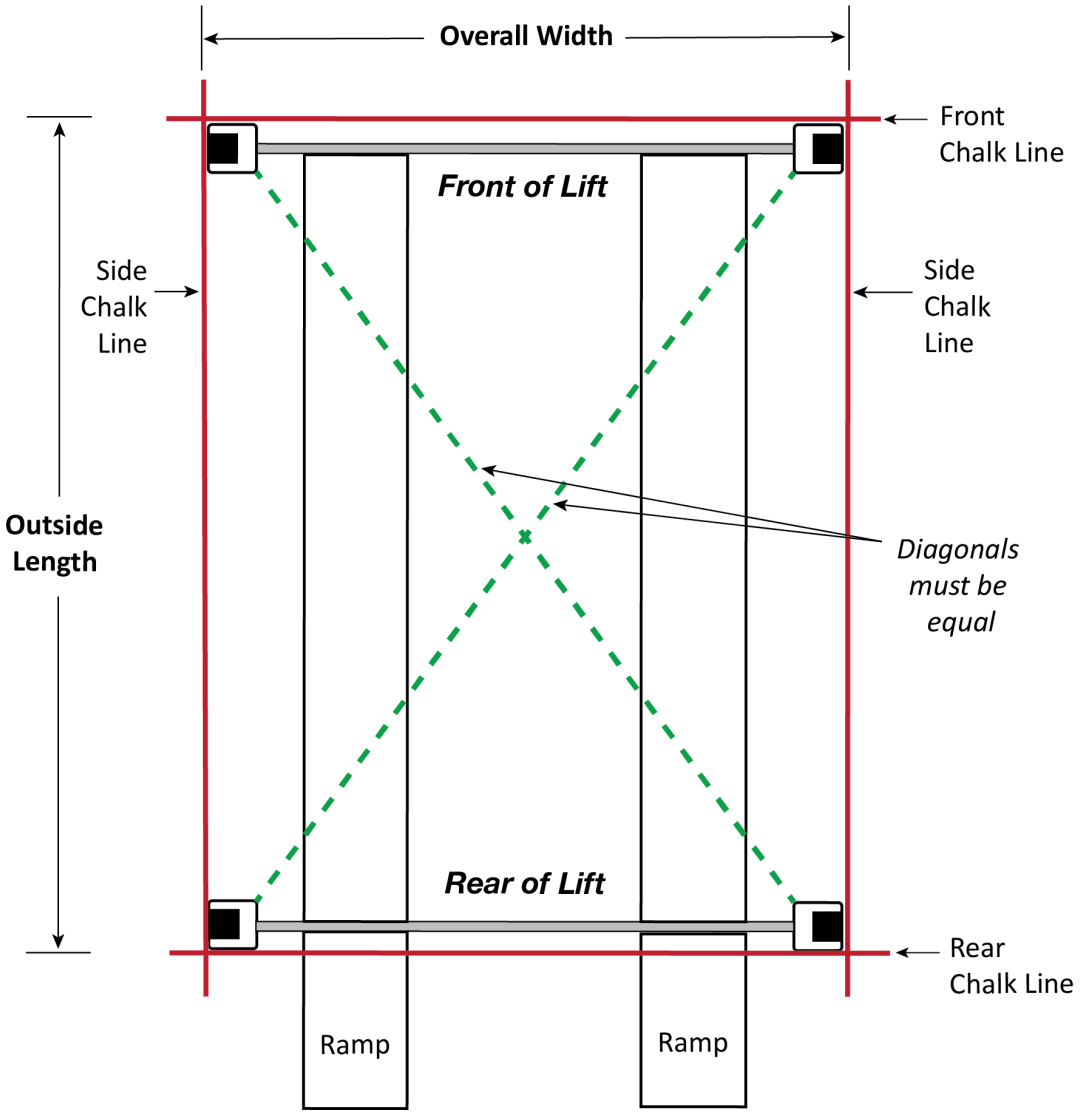

Top View. Not drawn to scale. Not all components shown.

To create Chalk Line Guides:

1. Create the Front Chalk Line where you want the Front of the Lift.

   Make the Front Chalk Line *longer* than the **Overall Width** setting.

2. Create the two Side Chalk Lines at 90° angles to the Front Chalk Line and parallel to each other.

   Make the Side Chalk Lines longer than the **Outside Length** setting.

   The Side Chalk Lines ***must*** be parallel to each other.

3. Create the Rear Chalk Line parallel to the Front Chalk Line.

   Make the Rear Chalk Line longer than the **Overall Width** setting.

   The Front and Rear Chalk Lines ***must*** also be parallel to each other.

4. Before moving the Posts into position, measure ***diagonally*** to make sure the two diagonal measurements are the same.

   Do not forget to check the diagonals.

5. When you move the Posts into position, put the corners of the Base Plates inside the corners created by the four Chalk Lines.

Unloading and Unpacking

Once the components are unloaded, they are your responsibility to move around. As the Lift includes a number of heavy pieces, the closer you unload them to the installation location, the better off you are.

⚠ **CAUTION** Some Lift components are very heavy; if handled incorrectly, they can damage materials like tile, sandstone, and brick. Try to handle the Lift components twice: once when delivered and once when moved into position. You must have a Forklift or Shop Crane to move them into position. Use care when moving them.

⚠ **WARNING** The Posts and Runways are delivered with stabilizing structures on each end. Be very careful when removing these stabilizing structures; the Posts and Runways can shift or even fall. If they fall on a person, they could cause serious injury.

Moving the Posts into Position

Use a Forklift or Shop Crane to move the Posts, one at a time, to the inside corners of the Chalk Line Guides.

Important: Position the Power Post at your chosen location. Remember, the Power Post can only go in two possible locations: the ***Front Driver-Side*** or the ***Rear Passenger-Side***.

Do not stand up the Posts yet; some of the following procedures are easier to complete if the Posts are laying on the ground.

Installing the Crosstubes

Your Lift has two Crosstubes:

- **Crosstube with Large Windows**: Goes on the end of the Lift *opposite* of the Power Post, with the Windows facing the inside.
- **Crosstube with Small Windows**: Goes next to the Power Post, with the Windows facing the inside.

Important: It is possible to install the Crosstubes ***incorrectly*** in several different ways. Take your time now and get it right the first time.

The following drawing shows the two Crosstube setups based on the Power Post location.

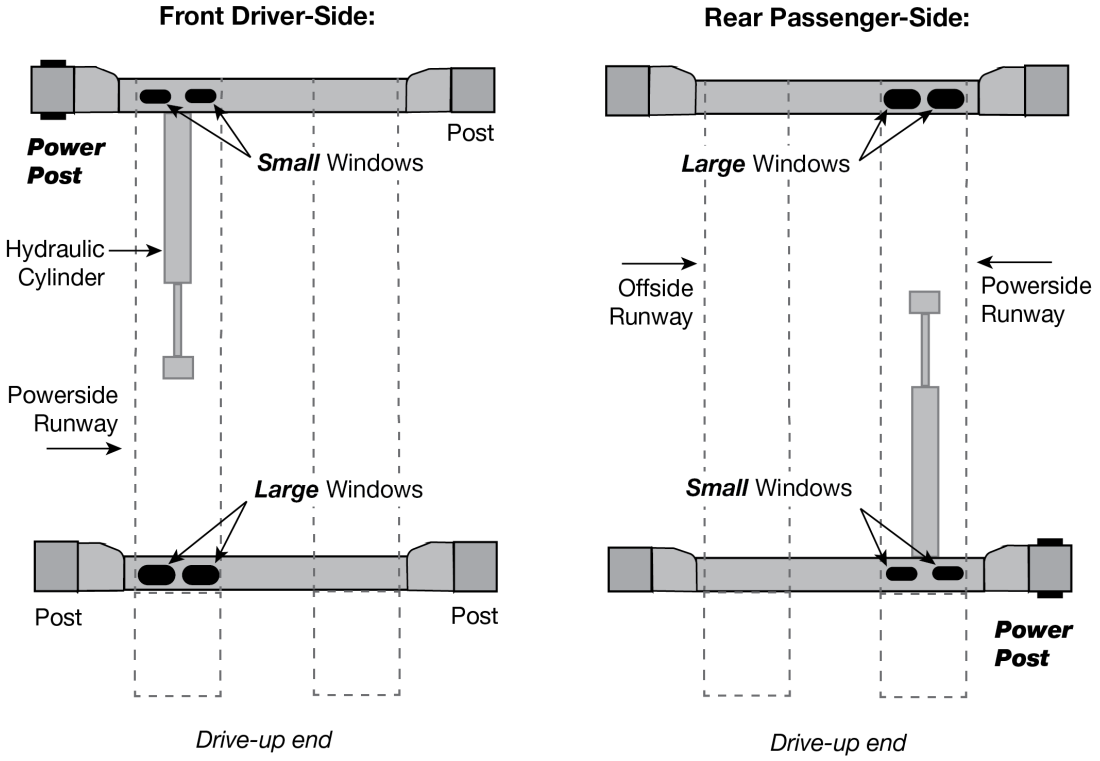

To install the Crosstubes:

1. Orient the Crosstubes in their required locations.
2. Put the black Slide Blocks into place on the outside ends of each Gusset (4 Blocks per Gusset).

   Align the holes in the Slide Blocks with the rods on the side of the Gusset, then press the Slide Blocks in. Make sure the Slide Blocks are oriented so that they create a Slot when pushed in.

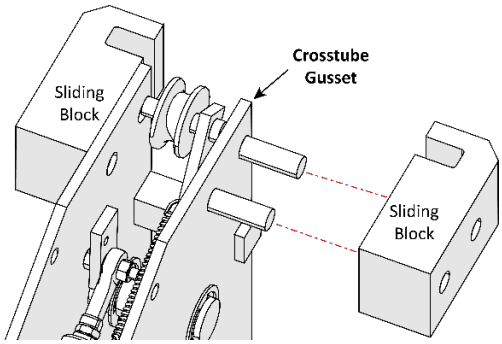

Top View. Drawing shows how to correctly install two Slide Blocks onto the Crosstube Gusset.

Not all components are shown.

The four Slide Blocks on a Gusset create two Slots. There is one Slot at the top of the Gusset and a second Slot at the bottom; the Ladder ***must*** go through ***both*** Slots on the Gusset.

⚠ **WARNING** If the Slide Blocks are not correctly installed, then the Slots for the Ladder are not created. In such a case, the Safety Locks will not work correctly, which endangers everyone who uses the Lift.

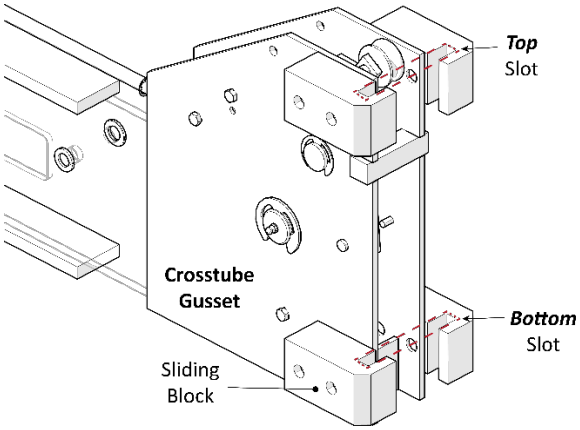

Front view. Drawing shows the Top and Bottom Slots created by the Slide Blocks.

Not all components are shown.

3. Put the Crosstubes into place by doing either of the following:
   - Lean over the two Posts at one end of the Lift (some people put them on sawhorses, some people lay them on the ground), slide the Crosstubes into place, then carefully stand up the Posts; make sure to put them back in their correct locations inside the Chalk Line guides.
   - Carefully stand up the Posts, use a Forklift or Shop Crane to raise the Crosstube above the top of the two Posts that it goes between, and then slide the Crosstube down to the bottom.

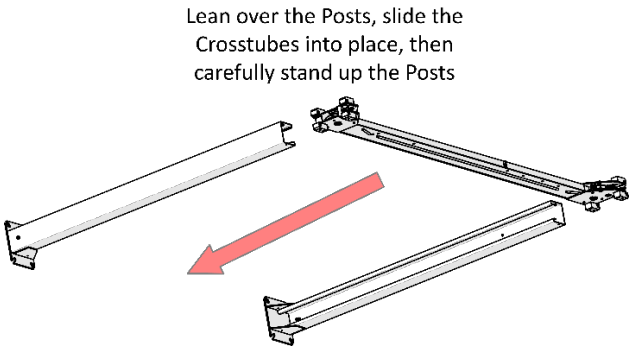

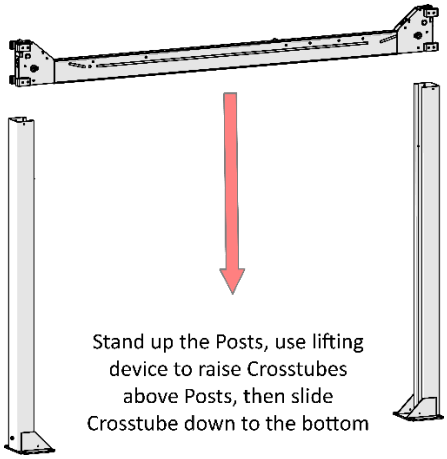

⚠ **WARNING** Use care when installing the Crosstubes, as the Posts are not anchored in place at this point. Dropping or knocking over the Posts may cause permanent damage equipment damage or serious personal injury. The Crosstubes and Posts are heavy; do not lift without assistance.

4. Perform Steps 2 and 3 for the other Crosstube.

Installing the Ladders and Top Cap

Each Post has a Ladder; each Ladder gets installed on the inside back of a Post. Ladders are secured at the top and the bottom.

Make sure to install each Ladder through ***both slots*** on each Crosstube Gusset.

Note: It is much easier to secure the bottom of the Ladders once the Crosstubes have been raised, so that portion of installing the Ladders is described in **Securing the Ladders**.

⚠ **WARNING** Make sure to install the Ladders correctly. If they are not installed correctly, the Safety Locks on your Lift may not hold the weight of a Vehicle, putting anyone under the Lift in danger.

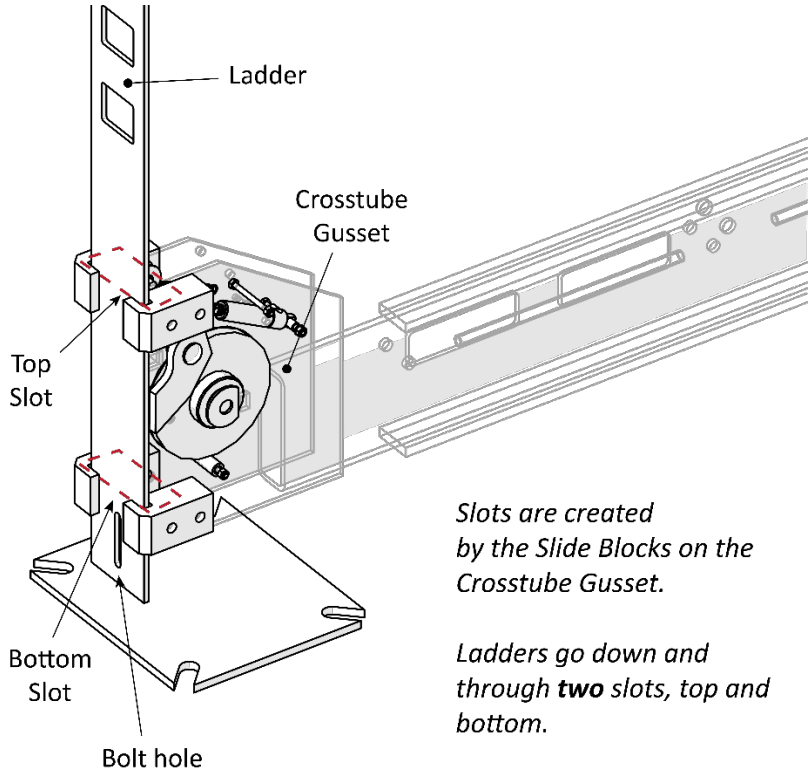

Slots are created by the Slide Blocks on the Crosstube Gusset.

*Ladders go down and through **two** slots, top and bottom.*

Post not shown in graphic.

Drawing shows how to route the Ladders through both Slots created by the Slide Blocks.

Not all components shown. Post not shown for clarity.

To install the Ladders and the Top Caps:

1. Take a Ladder and slide it down the back of the Post, with the Bolt Hole end at the bottom.

   Make sure the Ladder goes through both Slots on each Gusset.

   ⚠ **WARNING** It is easy to see the top Slot created by the Slide Blocks. It is difficult to see the bottom Slot, but it is ***required*** that the Ladder goes through ***both*** Slots.

2. Install the remaining Ladders the same way.

3. ***Moving to the top of the Ladders***, put the M20 Nut on the Threaded Bolt at the top; move the M20 Nut down half an inch from the top of the Post.

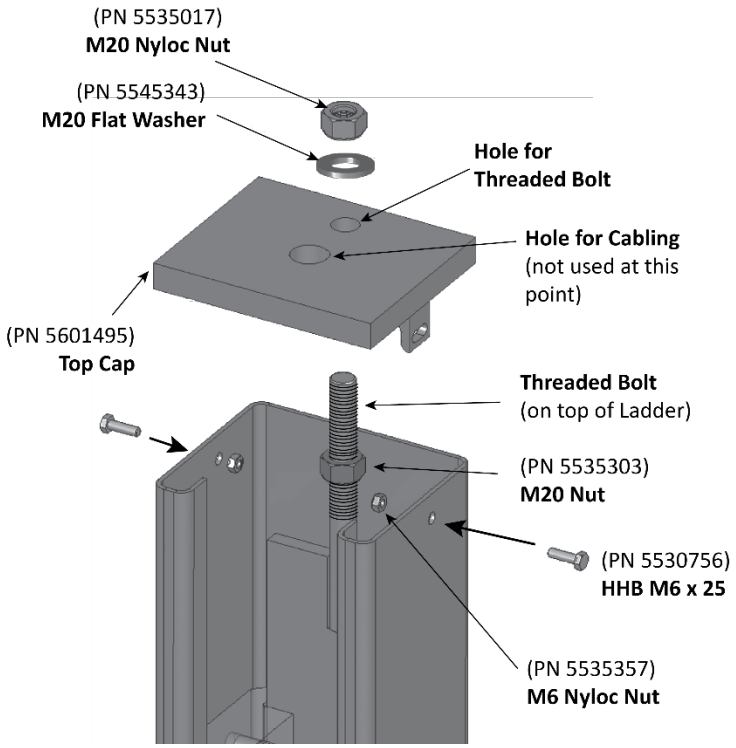

Drawing shows connections to make to the Top Cap, near the top of the Posts.

Not all components shown.

4. Put the Top Caps in place and secure the sides with two M6 x 25 Hex Bolts.
5. Attach a M20 Nyloc Nut on each Safety Ladder until **1 in** / **25 mm** of thread is above the top of the Top Nut.

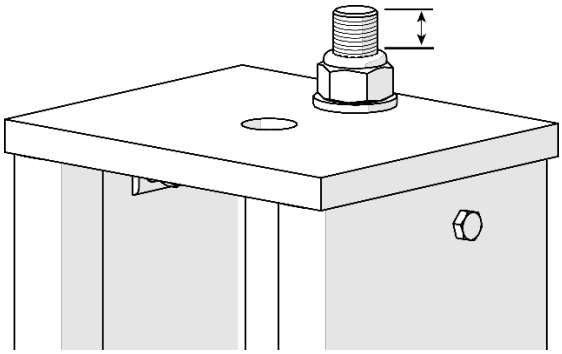

Drawing shows the threads to leave out above the Top Nut. Adjust as needed.

Not all components shown.

Note: Do not securely tighten the Top Nut at the top of the Top Cap at this point; they can be securely tightened after you do the final leveling to the Lift.

6. Install the remaining Top Caps the same way.

Raising the Crosstubes

You need to manually raise the Crosstubes, which makes it easier to complete the rest of the installation tasks. The Crosstubes need to be raised the same height, to the same Safety Lock.

⚠ **WARNING** Use care when raising the Crosstubes, as the Posts are not anchored in place at this point. Dropping or knocking over the Posts may cause permanent equipment damage or serious personal injury. The Crosstubes and Posts are heavy; do not lift without assistance. BendPak strongly recommends having at least two people work together to raise the Crosstubes.

To raise the Crosstubes:

1. Use a Forklift or Shop Crane to carefully raise each Crosstube.

   You want to raise the Crosstubes at least two feet off the ground, to have enough room to work under it, making it easier to route the Lifting Cables and Lines.

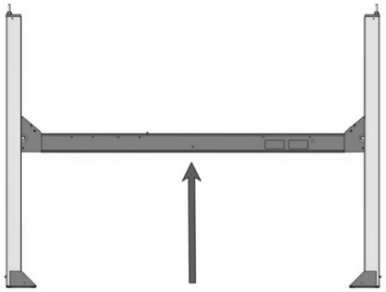

Important: ***The Slack Safeties cannot be engaged as you continue with the installation***. Because the Cables are not in place yet, the Slack Safeties are going to engage when you manually raise the Crosstubes. You need to disengage them after you have raised the Crosstubes. The Primary Safeties are not impacted; they will engage normally when you manually raise each Crosstube, which is what you want.

2. To disengage the Slack Safeties after raising a Crosstube: raise and hold one end of a Crosstube so the Primary and Slack Safety Locks are disengaged, push and hold the Sheave in towards the Ladder and the back of the Post (this moves the Slack Safety Lock so it cannot to engage), lower the end of the Crosstube, then release the Sheave or Steel Piece.

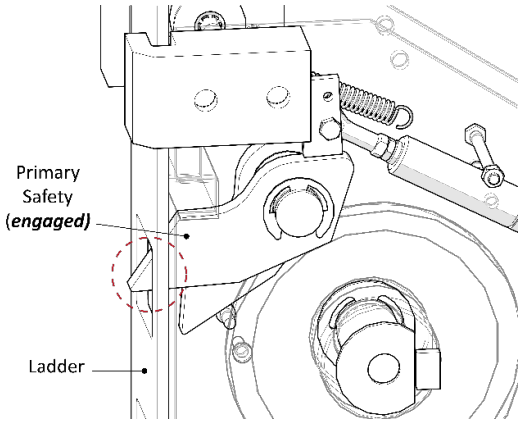

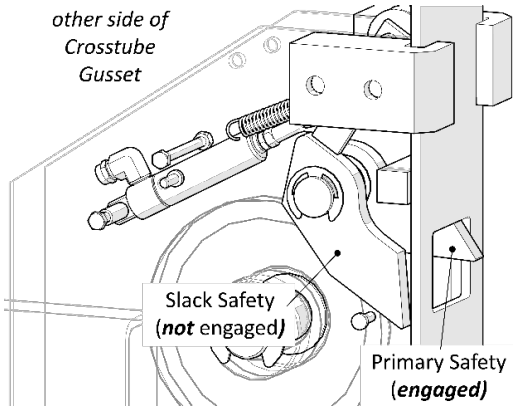

3. Disengage the other three Slack Safety Locks as in Step 2.
4. Once both Crosstubes are in position, ***all four Primary Safeties are engaged***, and all four Slack Safeties have been **disengaged**, you can continue with the installation.

Securing the Ladders

Because it is much easier to secure the Ladders at the bottom of each Post ***after*** the Crosstubes have been raised, that procedure is described here.

The following procedure assumes that the Ladders are in place and secured at the top. If this is ***not*** the case, return to **Installing the Ladders and Top Cap**.

To secure the Ladders:

1. Locate the required 4 Hex Head Bolts, 8 Flat Washers, 4 Spacers, and 4 Nyloc Nuts.
2. Secure the bottom of the Ladders as shown in the drawing below, making sure to orient the Spacer between the Ladder and the back of the Post.

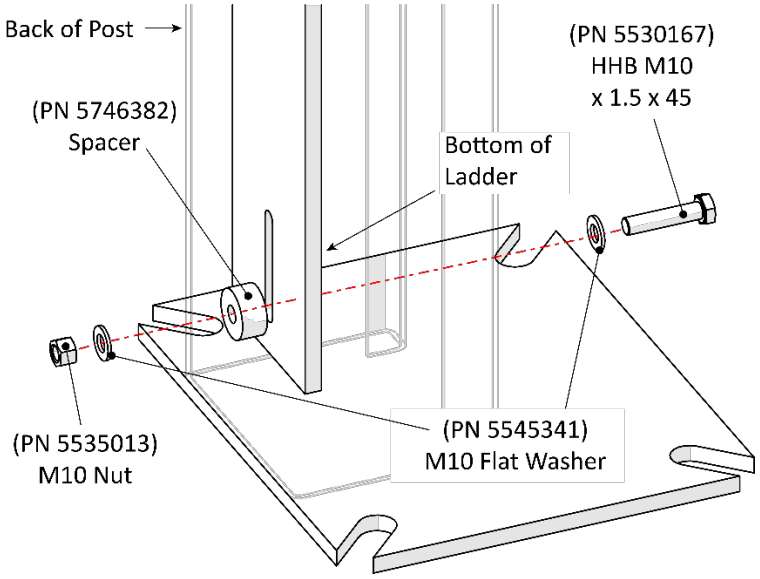

Drawing shows the connections to make to the bottom of the Post.

Not all components are shown. Some components removed for clarity.

3. Perform the same procedure to secure the other 3 Ladders on the Lift.
4. Make sure the Primary Safety Locks are engaged.

⚠ **WARNING** Do not continue with the installation until you have visually confirmed that all four Primary Safety Locks are engaged. If they are not engaged, the Runways could move or fall, possibly causing injury (even death) or product damage.

5. If you haven't already done so, stand up each Post. Have at least two people work together to stand up a Post.

⚠ **CAUTION** Use caution when walking around the Posts; they are not anchored down at this point, so it is possible to knock them over, which could cause injury.

6. Use a Transit Level to estimate the Shim requirements: use a target to find the difference in height between the Posts. The difference is the estimated amount of Shim thickness you will need.

   Do not use Shims and/or Anchor Bolts to shim more than 1/2 an inch.

   Do not anchor the Posts at this point.

Installing the Runways

Your Lift has two Runways:

- **Powerside Runway**: Holds the Hydraulic Cylinder underneath it. Has a hole on the outside Rear for the Flex Tube. Cable routing starts under the Powerside Runway.
- **Offside Runway**: The Offside Runway does not have a Hydraulic Cylinder under it, nor are there any Lifting Cables under it. It can be installed in the wide or narrow setting.

The following drawing shows the correct orientation of the Runways for both Power Post locations.

Power Post: *Front Driver-side*

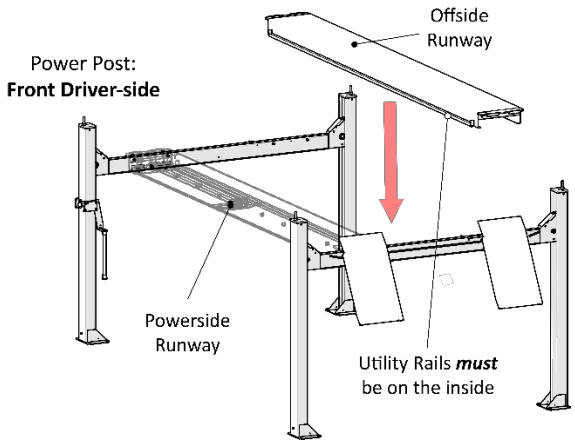

Power Post: *Rear Passenger-side*

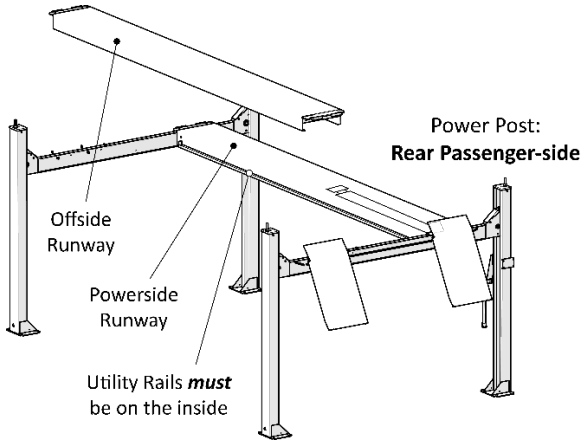

Top View. Not drawn to scale. Not all components shown.

Use a Forklift or Shop Crane to raise the Runways and move them into position.

⚠ **WARNING** Pay close attention when moving the Runways into position; they are very heavy and long, and could shift position or fall, potentially causing serious injury.

To install the Runways:

1. Correctly orient the Powerside Runway and the Offside Runway.
2. Make sure the Sheaves have been removed on both ends of the Powerside Runway.

Front of Runway:

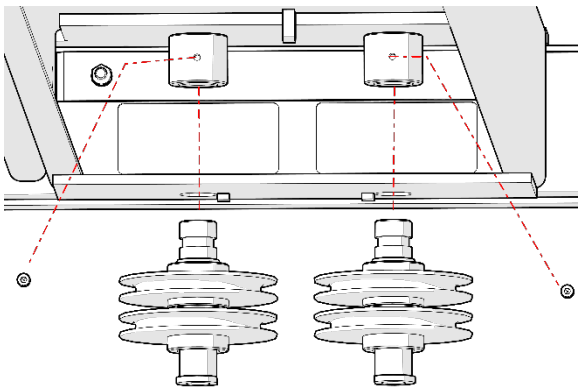

Rear of Runway:

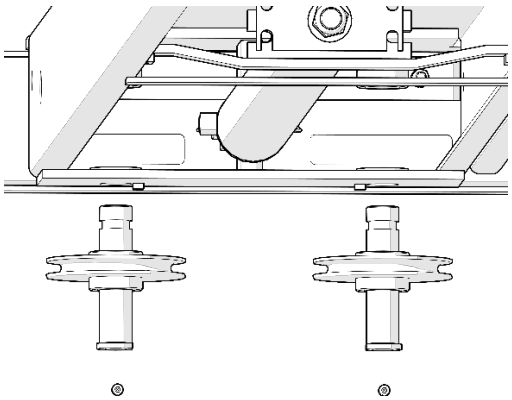

Keep the components close, you will be reinstalling them at the same location with the same components later in the installation.

3. Use a Forklift or Shop Crane to pick up the Runways, one at a time, and move them into place.
4. Bolt both Runways into place, two Hex Head Bolts on each end of the Runways.

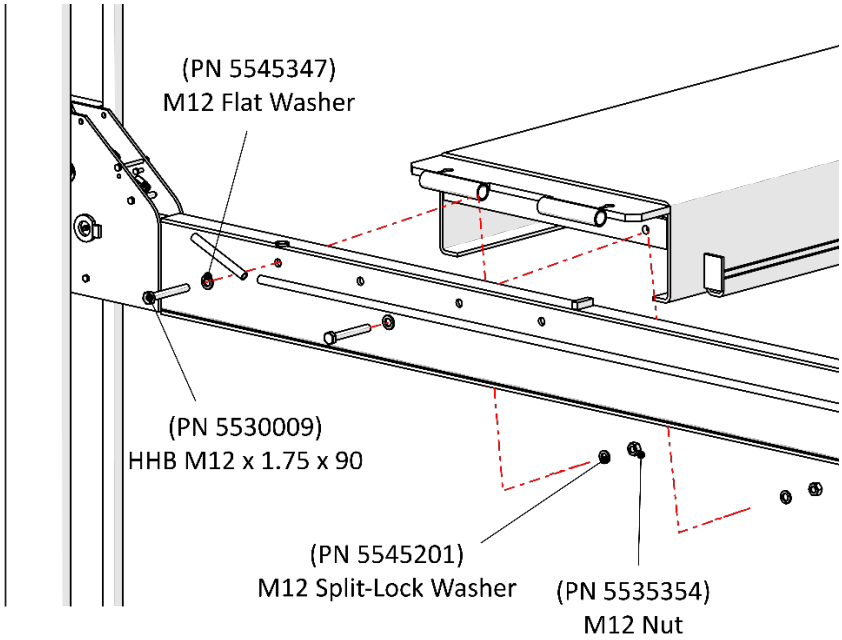

Drawing shows how to secure the Runways to the Crosstubes.

Two Bolts on each end of the Runway.

Not all components shown.

Important: The Offside Runway ***must*** be bolted on both ends when using the optional Rolling Jack.

5. Make sure that the Primary Locks are engaged.

⚠ **WARNING** Do not continue with the installation until you have visually confirmed that all four Safety Locks are engaged. If they are not engaged, the Runways could move or fall, possibly causing personal injury or product damage.

Installing the First End of the Flex Tube

The Flex Tube protects three different Cables that come out from under the Powerside Runway on their way to the Power Unit: The Return Line, the Air Line, and Hydraulic Hose.

Attaching the other end of the Flex Tube to the Power Unit is described later in the installation.

The following drawing shows the Flex Tube.

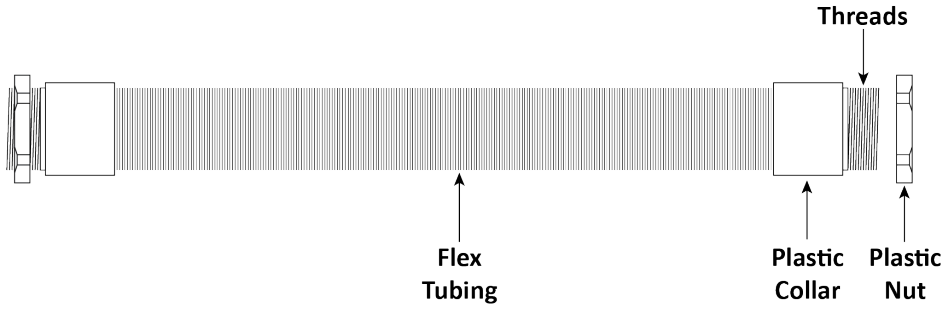

Side view. Not drawn to scale. Not all components shown.

To install the Flex Tube to the Powerside Runway:

1. Unscrew the Plastic Nut from one end of the Flex Tube. It does not matter which end you use.
2. Holding the Flex Tube by the Plastic Collar, put the Threads on the end of the Flex Tube through the hole on the Powerside Runway.

   The Threads go into the holes until they are accessible from the inside, while the rest of the Flex Tube stays outside.
3. On the inside of the Powerside Runway, screw the Plastic Nut back onto the Threads of the Flex Tube and tighten it.

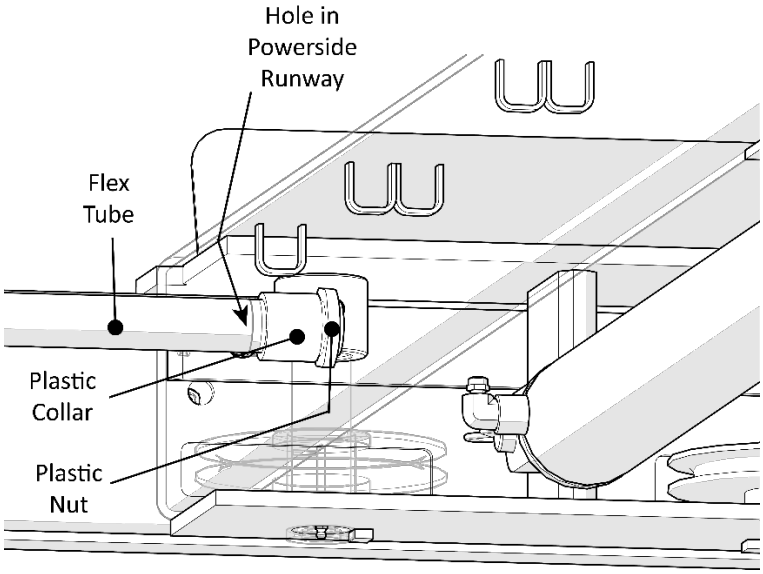

Drawing shows how to install the Flex Tube to the Powerside Runway.

View is from the Rear of the Lift, near the Power Post.

Not all components are shown.

4. Let the other end of the Flex Tube hang in place for now.

About Cable Sheaves

The Cable Sheaves were removed earlier in the installation; they are put back into place when routing the Lifting Cables.

Important: It is possible to reinstall the Cable Sheaves ***incorrectly***. Take your time now and get it right the first time.

Verify that the Cable Sheaves in the ***Crosstube with Large Windows*** are oriented so that the Short Sides of the Sheave Hubs are together, as shown below.

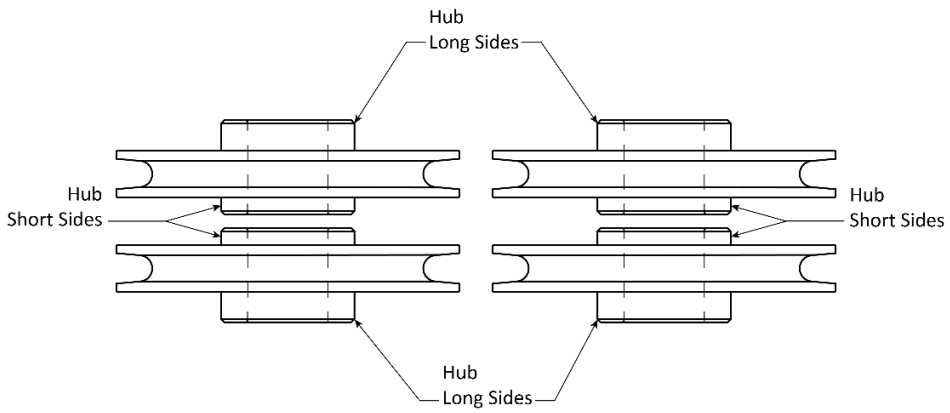

Verify that the Single Cable Sheaves in the ***Crosstube with* Small *Windows*** are oriented so that the Short Side of the Hub is on *top* and the Long Side is on the *bottom*, as shown below.

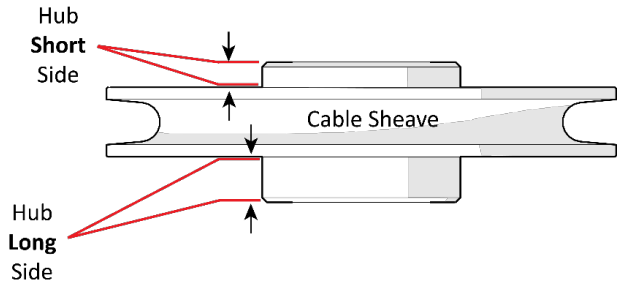

Before routing the Lifting Cables, you also need to extend the Piston on the Hydraulic Cylinder.

To extend the Piston:

1. Remove the Shipping Plug from the Return Port.

   The Return Line Port is on the Cylinder end closest to where the Power Unit will be.

2. Attach an air pressure source to the Return Line Port.
3. Use the air pressure to extend the Hydraulic Cylinder's Piston and Retaining Plate.

   If the Cylinder does not move, stop using air pressure; instead, use a pulling device (such as a Come Along Tool) to extend the Piston and Retaining Plate; be care not to damage the Piston.

4. Reinstall the Shipping Plug to the Return Line Port.

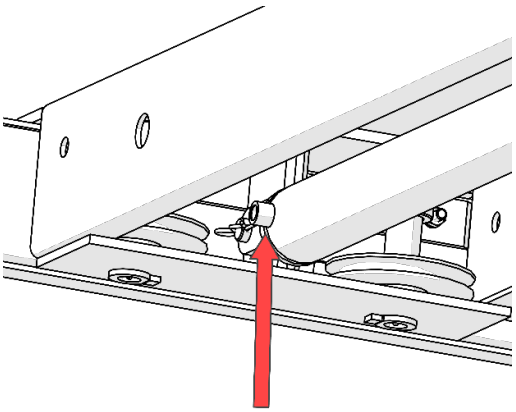

Do not exceed 50 psi.

Routing the Lifting Cables

The figure below details the routing for all four Lifting Cables. Refer to this figure as you route the Lift Cables in the procedure that follows.

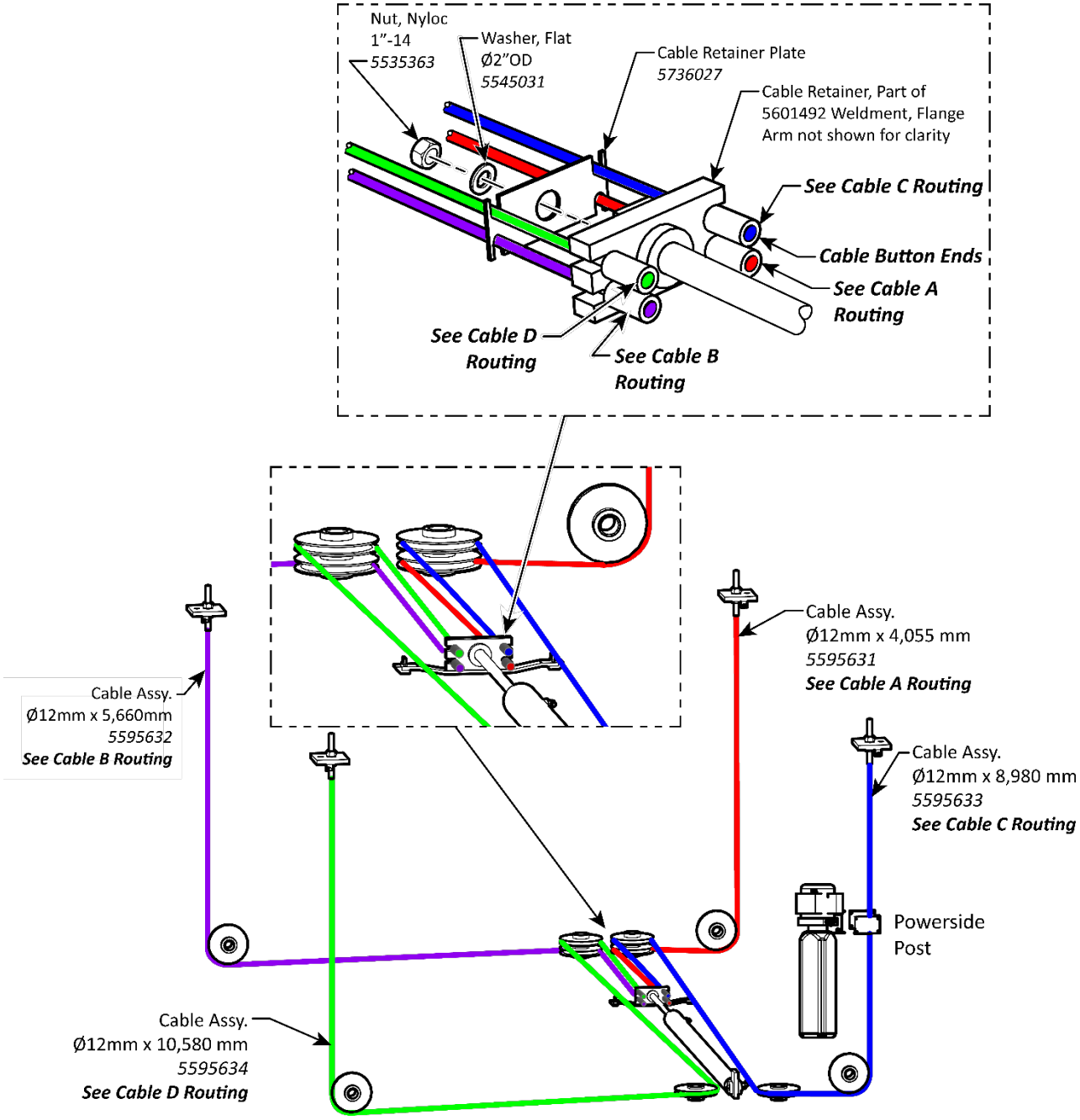

Not to scale. Components removed for clarity.

The following procedure assumes you have nearby the four Lifting Cables and Sheaves you removed prior to installing the Runways.

Routing Lifting Cables A and C:

1. ***Starting with Lifting Cable A***, remove the Nut and Washer from the Threaded End of the Cable (but keep it nearby, you will need it soon).

   Check the Cable's label to verify you have the correct Lifting Cable. Cable A is Ø12 x 4,055 mm (5595631).

2. Route the Threaded End of Lifting Cable A into its Large Window on the Crosstube, push it towards Post A, and then pull the Threaded End out of the Crosstube at the bottom of the Gusset.

⚠ **WARNING** Use care when routing the Lifting Cables through the Crosstubes. Lifting Cables must be routed below the Mounting Bolts that secure the Crosstube to the Runways. Failure to properly route the Lifting Cables may result in serious equipment damage or injury.

3. Route the Threaded End of Lifting Cable A under the Gusset Sheave, then route it up past the top of the Crosstube Gusset.

   The following drawing shows how to route the Lifting Cable through the Gusset.

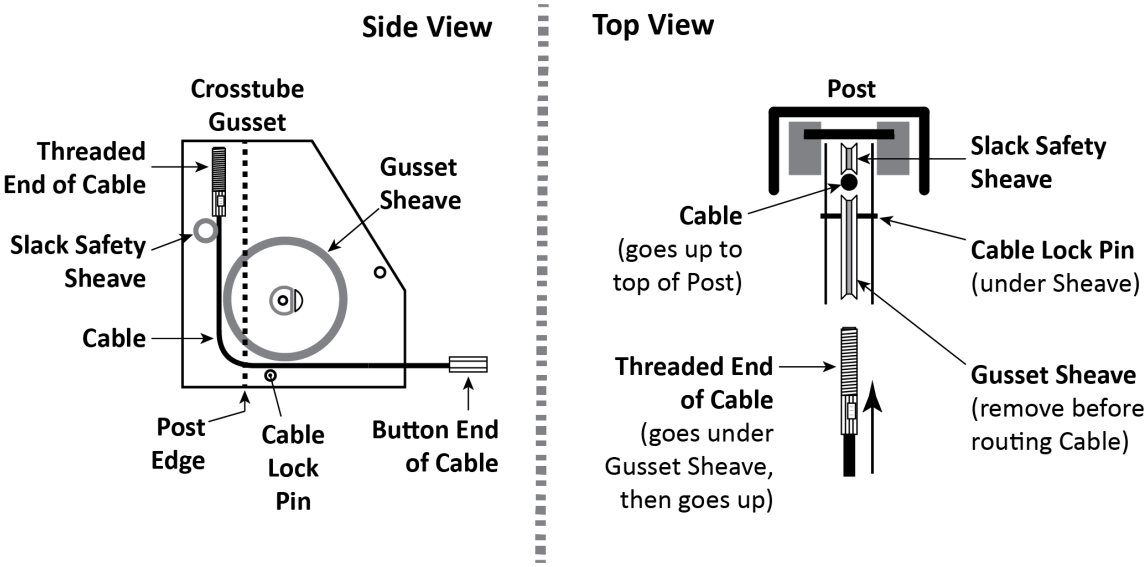

Important: When routing a Lifting Cable in its Post, the Cable must go ***under*** the Gusset Sheave and be on the side of the Slack Safety Sheave. When the Cables are pulled tight, the Cable prevents the Slack Safety from engaging, which is what you want. If the Cable is ***not in this exact location***, the Slack Safeties will ***not*** work correctly.

4. With the Lifting Cable in place, reinstall the Gusset Sheave and the Cable Lock Pin in Post A.
5. Make sure Lifting Cable A is correctly positioned: in between the Gusset Sheave and the Slack Safety Sheave, with the Cable Lock Pin ***under*** it.
6. Push the Threaded End of Lifting Cable **A** up to and through the Top Cap (at the top of the Post) and ***hand tighten*** it in place with the Nut and Washer you removed earlier.

Make the Nut finger tight at this point, so that there is little play in the cabling. We will tighten all four Lift Cable Adjusting Nuts to take slack out of the cable once all four cables are in place. Final Cable adjustment will occur during **Final Leveling**.

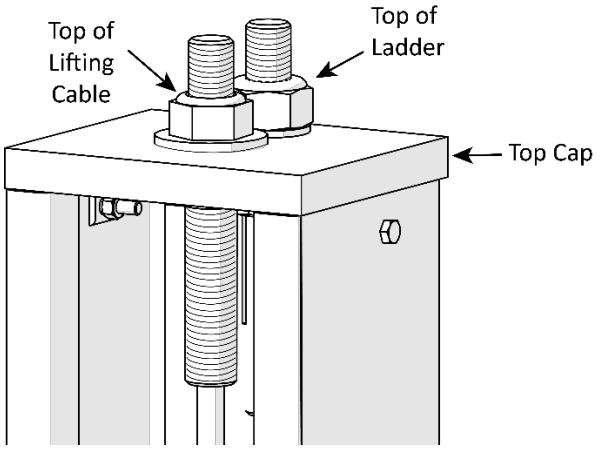

Drawing shows the Threaded end of the Lifting Cable in position in the Top Cap.

View is from the top of the Post.

Components removed for clarity.

7. ***Switching to Lifting Cable C***, repeat Steps 1 through 7 for Lifting Cable **C**, starting at the Small Window near the bottom of Post C (the Power Post).
8. Reinstall a Single Cable Sheave, lubricate the Sheave bore and pin with Red Lithium Grease, then verify Lifting Cable **C** is correctly positioned in the Cable Sheave in the Small Window.
9. Under the Powerside Runway, move the rest of Lifting Cable **C** back towards the Crosstube with Large Windows.
10. Lubricate the Double Cable Sheave Pin and Bore with Red Lithium Grease. Return the Double Cable Sheave in the Large Window, making sure Lifting Cable **A** is seated in the ***Bottom*** Sheave and Lifting Cable **C** is seated in the ***Top*** Sheave, as shown below.

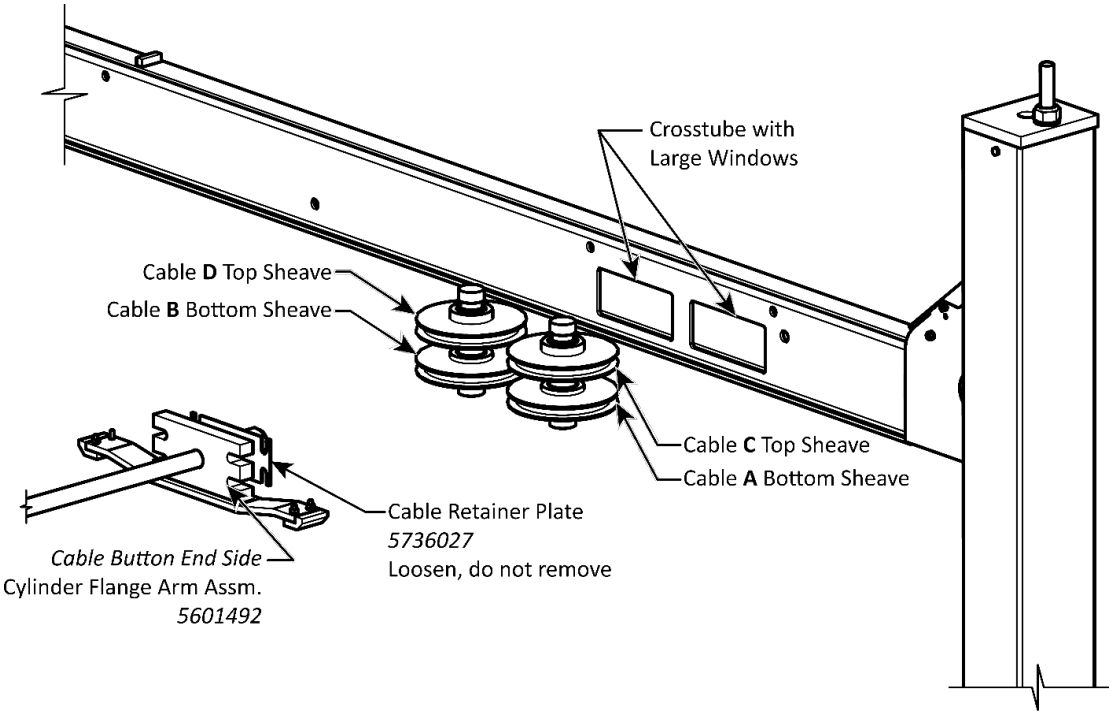

Do not scale. Components removed for clarity. Double Cable Sheaves separated for clarity.

11. On the end of the Hydraulic Cylinder, loosen the Cable Retaining Plate enough to give you space to slip the Button End of each Cable into its place on the Cylinder Flange Arm.

    ⚠ **WARNING** ***Do not remove the Cable Retainer Plate!*** Loosen the Nut enough to give you space to slip the Button End of each Lifting Cable into place on the Cylinder Flange Arm mounted to the Cylinder.

12. Pull the Button Ends of Lifting Cables **A** and **C** back towards the middle of the Runway, past the Retainer Plate, and into its assigned slot on the Cylinder Flange Arm.

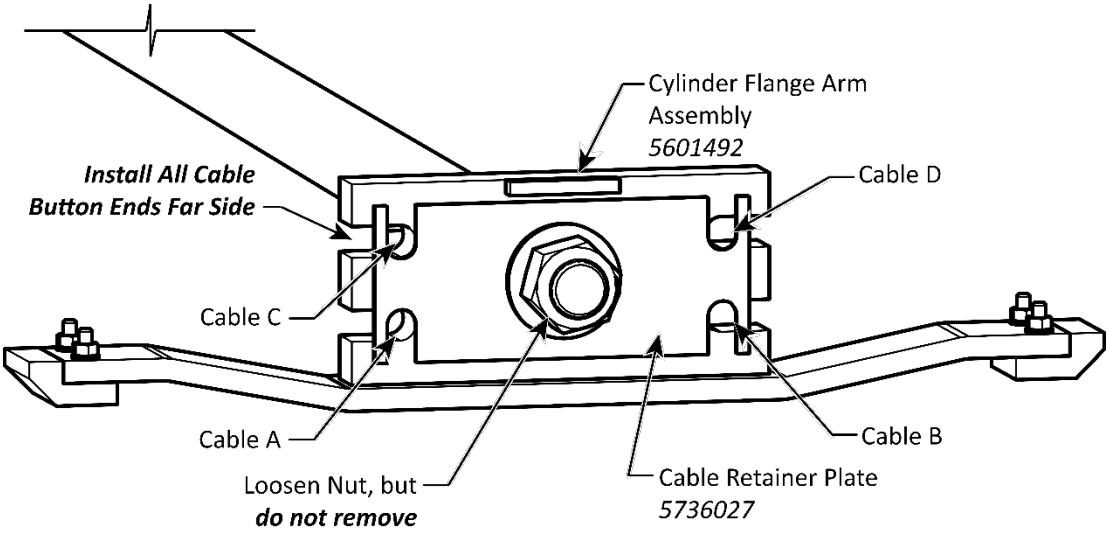

Do not scale. Components removed for clarity.

Lifting Cables **A** and **C** are now correctly routed to their Posts.

Routing Lifting Cables B and D:

Routing Lifting Cables **B** and **D** is the same process as routing Lifting Cables **A** and **C**, just routed to the other two Posts and using the remaining Sheaves. Refer to the drawings in the previous section.

After routing all four cables, take up the Cable slack by tightening the threaded end of the Cables at the top of the Posts. Do not over-tighten.

NOTICE The final Cable tension adjustment will occur in the **Final Leveling** of the Lift.

Working with Compression Fittings and Tubing

Your Lift comes with a roll of ¼ inch, black, polyethylene Tubing (also called Poly-Flo® Tubing) that is used with Compression Fittings in two ways: for the Return Line and for the Air Lines.

Important: While both lines use Tubing and Compression Fittings, the Return Line and Air Lines are used for completely separate purposes; do not connect the two together.

Note: Compression Fittings are different from Hydraulic Fittings. This section covers Compression Fittings only.

The components involved with Compression Fittings include:

- **¼ inch, black, polyethylene Tubing**. You use a single piece of Tubing for the Return Line. The Air Lines require multiple Tubing pieces. Create the Tubing pieces for both the Return Line and the Air Lines by cutting lengths from the long roll of Tubing supplied with your Lift.
- **Elbow Compression Fittings**. The Hydraulic Cylinder uses an Elbow Compression Fitting and then one Elbow Compression Fitting goes on the Power Unit.
- **Tee Compression Fittings**. The Air Line segments requires three Tee Compression Fittings.
- **Nuts, Ferrules, Rods, and Threads**. Each connector on Elbow and Tee Compression Fittings have a Nut, Ferrule, Rod, and Threads (see drawing below). The Nut holds the Tubing and Fitting together. The Ferrule compresses when you tighten the Nut on the Threads to make a secure connection. The Rod goes inside the Tubing so that nothing leaks out.

The following drawing shows the components of a connector on a Tee Compression Fitting.

Important: ***Ferrules can only be tightened once***. When you tighten the Nut on the Threads, the Ferrule gets compressed; it literally changes shape and ***cannot*** be used again.

To connect Tubing to a Compression Fitting:

1. Push the Tubing through the Nut and over the Rod.

   Do not push hard; you only need the Tubing to go a little way over the Rod. You cannot see the Ferrule at this point, but the Tubing must go through the Ferrule and over the Rod.

2. Slide the Nut on the Tubing ***away from the Fitting***; if the Nut is still on the Threads, unscrew it from the Threads and then slide it away from the Fitting. See the drawing above.

3. Slide the Ferrule over the Tubing, away from the Fitting and towards the Nut.

4. With the Nut and the Ferrule out of the way, push the Tubing further over the Rod until it stops.

5. Slide the Ferrule and the Nut back to the Threads on the Fitting.

   The Ferrule goes around the Rod and under the Threads. The Nut goes onto the Threads.

6. Tighten the Nut.

   Remember that the Ferrule can only be used once; do not tighten the Nut until everything is ready.

Installing the Air Lines

The Air Lines use air pressure to disengage the Safety Locks in each Post so that you can lower the Runways.

An Air Supply (3 to 25 cfm at 50 — 150 psi) is required to disengage the Safety Locks.

⚠ **CAUTION** ***Do not let the Air Supply exceed 150 psi***; the Air Lines could burst or the Safety Locks malfunction.

Important: Do not confuse the Air Lines with the Return Line. They use the same Tubing and similar-looking connectors, but they are used for completely different things; the two systems cannot be connected to each other.

The Compression Elbow Fittings on the Crosstube Gussets come installed from the factory.

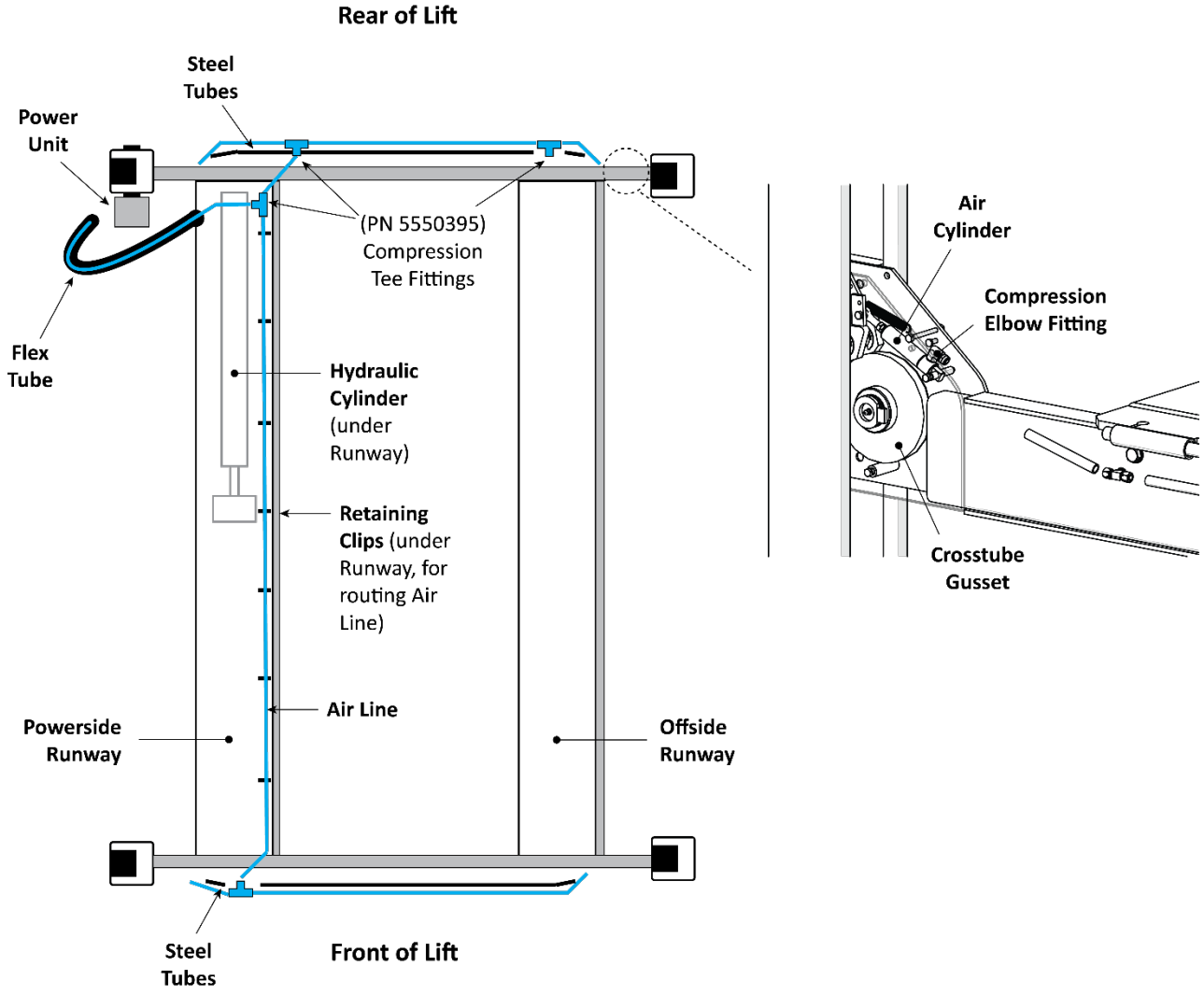

Air Lines shown outside Steel Tubes for clarity. Drawing not to scale. Some components not shown.

To install the Air Lines:

1. Find the roll of supplied ¼ inch, black, polyethylene Tubing and three Air Line Tee Fittings.
2. Measure the distances for each of the seven (7) Tubing pieces you will need (see the drawing on the previous page) for the Air Lines.
3. Cut seven pieces of Tubing to the measured lengths from the roll of Tubing.
4. Connect the various pieces of Tubing to the Tee Fittings on the Lift, as shown in the drawing on the previous page for the locations of the Tubing pieces.

   Make sure to position the three Air Line Tee Fittings as shown in the previous drawing.

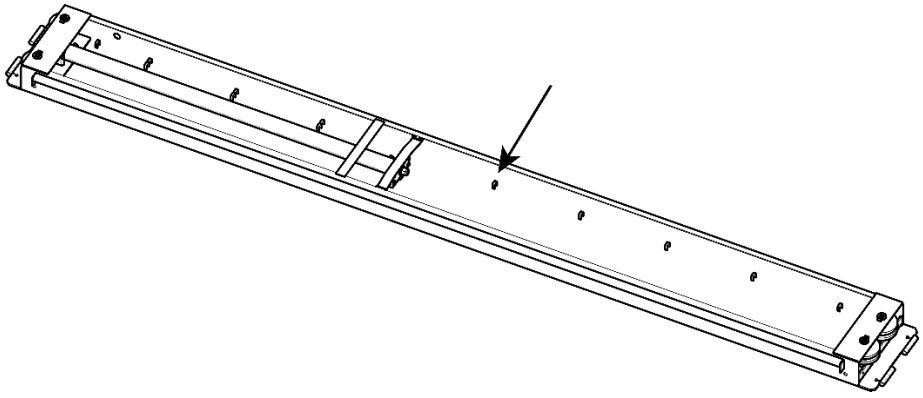

⚠ **WARNING** Make sure to route the Tubing pieces on the ***outside*** ends of the Front and Rear Crosstubes through the Steel Tubes on the ends of the Crosstubes. This keeps the Tubing and the Tee Fittings from being disturbed as you use the Lift. This is important, because if the Air Lines are disturbed, the Safety Locks on the Lift may not work correctly. If you notice that Tubing has become disconnected from an Air Line Tee Fitting, take the Lift out of service and get the Air Lines fixed.

   Refer to **Working with Compression Fittings and Tubing** for more information about connecting the Tubing to the Air Line Tee Fittings.

5. Leave the Power Unit end of the Air Line hanging out of the Flex Tube opening for now.

   It will be connected to a Tee Fitting and the Pushbutton Air Valve later.

IMPORTANT! PLEASE READ NOW

Hydraulic Fluid Contamination

Hydraulic Fluid Contamination poses a ***serious*** issue for your Lift; contaminants such as water, dirt, or other debris can get into the Hydraulic Hoses and Fittings on your Lift, making your new Lift inoperable.

Your Lift is shipped with clean components; however, BendPak strongly recommends that you take secondary precaution and clean all Hydraulic Hoses and Fittings prior to making connections. It is better and less costly to take these extra steps now so that you do not need to take your Lift out of service later to fix issues that could have been prevented at the time of installation.

There are several ways to clean Hydraulic Hoses and Fittings:

- **Compressed Air**. Use an air compressor to blow out contaminants from each Hydraulic Hose and Fitting prior to installation. Clean, dry air is preferred. Wear eye protection (safety glasses, goggles, or face shield) when using compressed air for cleaning. Never point an air hose nozzle at any part of your body or any other person.
- **Fluid Flushing**. As long as the Hydraulic Fluid is clean and compatible with the system fluid, you can flush Hoses and Fittings to create turbulent flow and remove particulates. Always ensure that the fluid itself is contaminant-free.

Some additional steps that will help keep the Hydraulic Fluid clean:

- **Remove old thread seal tape**. Some ports on the Hydraulic Cylinders are shipped with temporary plugs secured with thread seal tape, so make sure to thoroughly remove any leftover thread seal tape that may inadvertently enter the Hydraulic System.
- **Use a liquid thread sealant only**. Teflon paste-type thread sealant or Loctite™ 5452 thread sealant is recommended for all NPT Fittings. Do not over tighten NPT Fittings or they may crack. Never use thread seal tape on JIC Fittings or ORB O-Ring Fittings.
- **Always use clean equipment**. If you use a dirty bucket or funnel to transfer the Hydraulic Fluid into the Hydraulic Fluid Reservoir, the contaminants will likely be introduced into the Fluid. When using cleaning rags, use a lint-free rag.
- **Proper storage**. Keep the Hydraulic Fluid sealed in its container until ready for use; store the Fluid in a clean, dry, and cool area.
- **Cover the Hoses and Fittings**. Before installation, do not leave the ends of the Fittings exposed; the same applies for the Hydraulic Hoses. As a general rule, keep the Hydraulic Hoses and Fittings capped and kept clean in a clean area until ready for use.
- **Filter the new Hydraulic Fluid**. Just because it is new does not necessarily mean it is *clean*. Use an offline filtration cart or kidney loop system to make sure the Hydraulic Fluid is clean before being transferred into the Hydraulic Fluid Reservoir (even using a heavy duty nylon mesh screen is better than trusting what is left at the bottom of the barrel).
- **Avoid mixing different types of Hydraulic Fluid**. If Hydraulic Fluid needs to be replaced, make sure to flush the Hydraulic System of the old Hydraulic Fluid before you add the replacement Fluid; do not mix the two together.

About Thread Sealants

We recommend using a Liquid Thread Sealant (Loctite™ 5452 or similar PTFE Thread Sealant) to seal the Hydraulic components on your Lift.

Liquid Thread Sealant lubricates and fills the gaps between the Fitting threads, and leaves no residue that could contaminate the Hydraulic Fluid. Other types of Thread Sealants (like Teflon Tape) can shred during installation or removal and eventually enter the Hydraulic System.

Thread Sealant is not the same as a *Threadlocker*; Threadlocker holds assemblies tightly in place to prevent them from loosening over time, and is not easily removed.

Thread Sealant can be used with most Hydraulic Fittings, although you probably only need to use it with NPT connectors.

To apply Thread Sealant:

1. Make sure the Fittings and connectors you are going to use are clean and dry.

   If you are adding Thread Sealant to a Fitting or connector that has already been used with a different Sealant, use a wire brush to thoroughly remove the old sealant before adding more.

2. Skipping the top thread, apply a small amount of Thread Sealant to the first four threads of the NPT Fitting.

   ⚠ **WARNING** Always wear the proper protective equipment when handling Thread Sealant.

   You only need a small amount because the sealant spreads to the other threads as it is tightened into place. If you put too much, the excess liquid will be pushed out when the Fitting is tightened; use a rag to wipe the excess.

3. Tighten the Fitting into the connector; do ***not*** over tighten the Fitting.
4. Allow the manufacturer-recommended **24 hour** curing time before pressurizing the system.

Installing the Return Line

The Return Line takes excess Hydraulic Fluid coming out of the Hydraulic Cylinder and sends it back into the Fluid Reservoir on the Power Unit.

The Return Line is a single piece of ¼ inch, black, polyethylene Tubing with Elbow Compression Fittings on each end. You need to cut off a piece of the supplied Tubing of the right length to create the Return Line.

Important: The Return Line uses the same ¼ inch, black, polyethylene Tubing as the Air Lines. Be sure not to confuse the two; the Return Line and the Air Lines do completely different things and ***must*** be kept separate from each other.

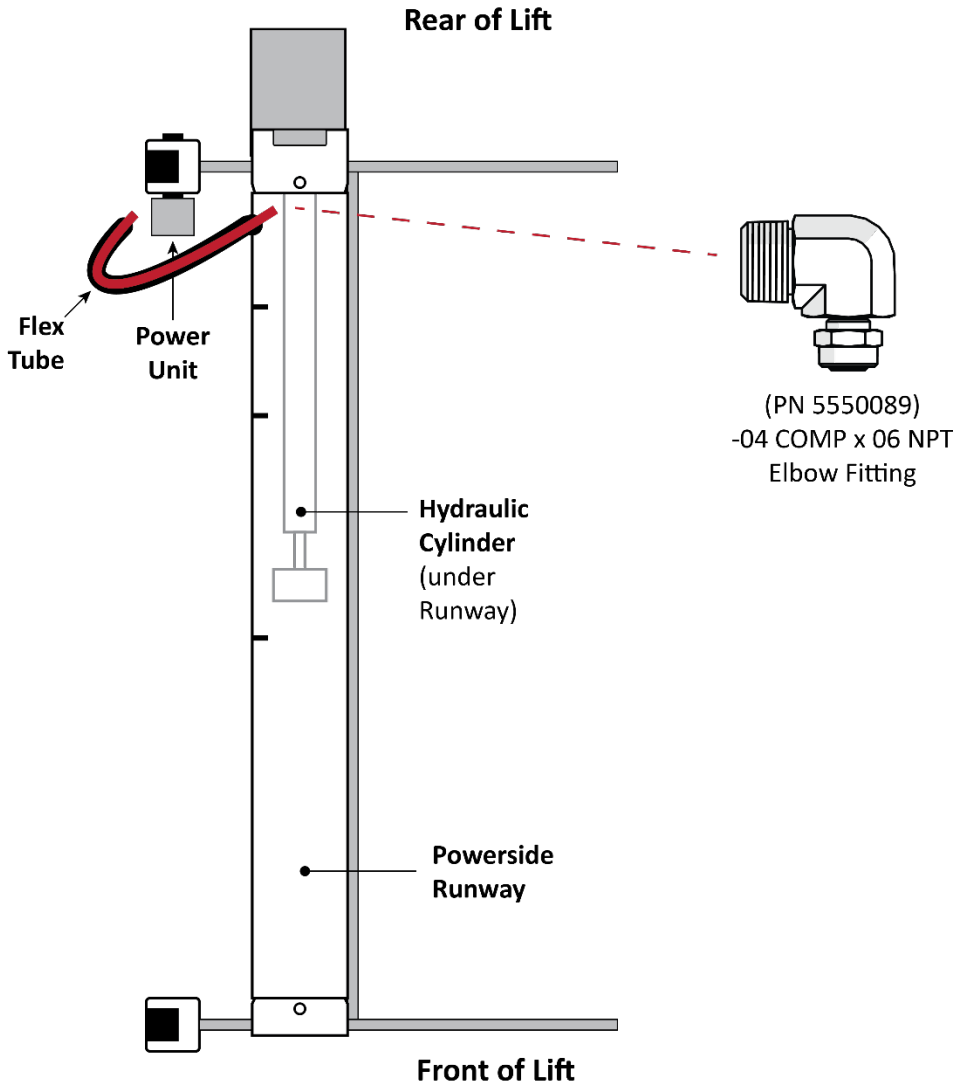

Top view. Not drawn to scale. Not all components are shown.

To install the Return Line:

1. Measure the distance from the Return Line Port on the Hydraulic Cylinder to the Return Line Port on the Power Unit.
2. Cut a piece of Tubing to the measured length from the roll of Tubing that comes with the Lift.

   It is better to cut the Tubing a little too long rather than a little too short.
3. Route the Tubing from the Hydraulic Cylinder through the Flex Tube opening, and out next to where the Power Unit will be installed.
4. Remove the Shipping Plug from the Return Line Port on the Hydraulic Cylinder.
5. Connect and tighten the Elbow Fitting (5550089) into the opening where the Shipping Plug was.

   Use Thread Sealant on NPT threads only.

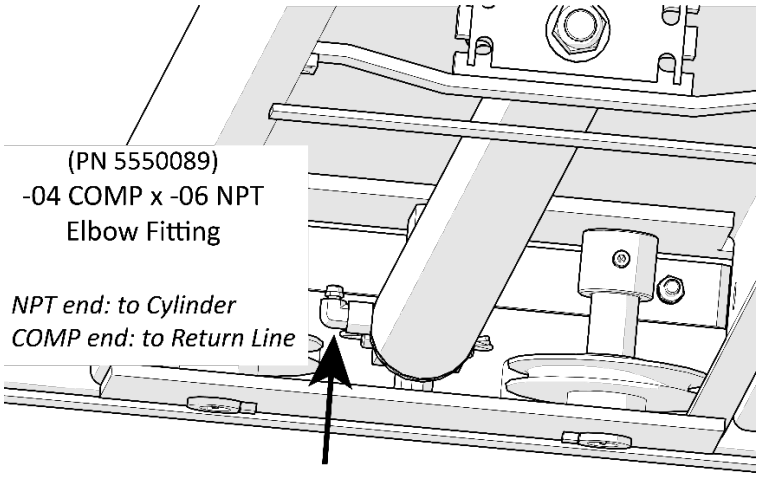

Drawing shows how to connect the Return Line Fitting to the Hydraulic Cylinder.

View is from underneath the Powerside Runway, near Cylinder end.

Not all components are shown.

6. Connect one end of the Return Line to the COMP end of the Fitting.

   Refer to **Working with Compression Fittings and Tubing** for instructions.
7. Leave the Power Unit end of the Return Line hanging out of the Flex Tube opening for now.

   It will be connected to the Power Unit later in the installation.

Installing the Hydraulic Hose

To install the Hydraulic Hose, you will need:

- **The Hydraulic Hose**. The Hydraulic Hose has a Curved end and Straight end.
- **JIC to NPT Hydraulic Fitting**. The JIC end goes to the Hydraulic Hose and the NPT end goes to the Hydraulic Cylinder.

The following drawing shows the connections to make to the Hydraulic Hose.

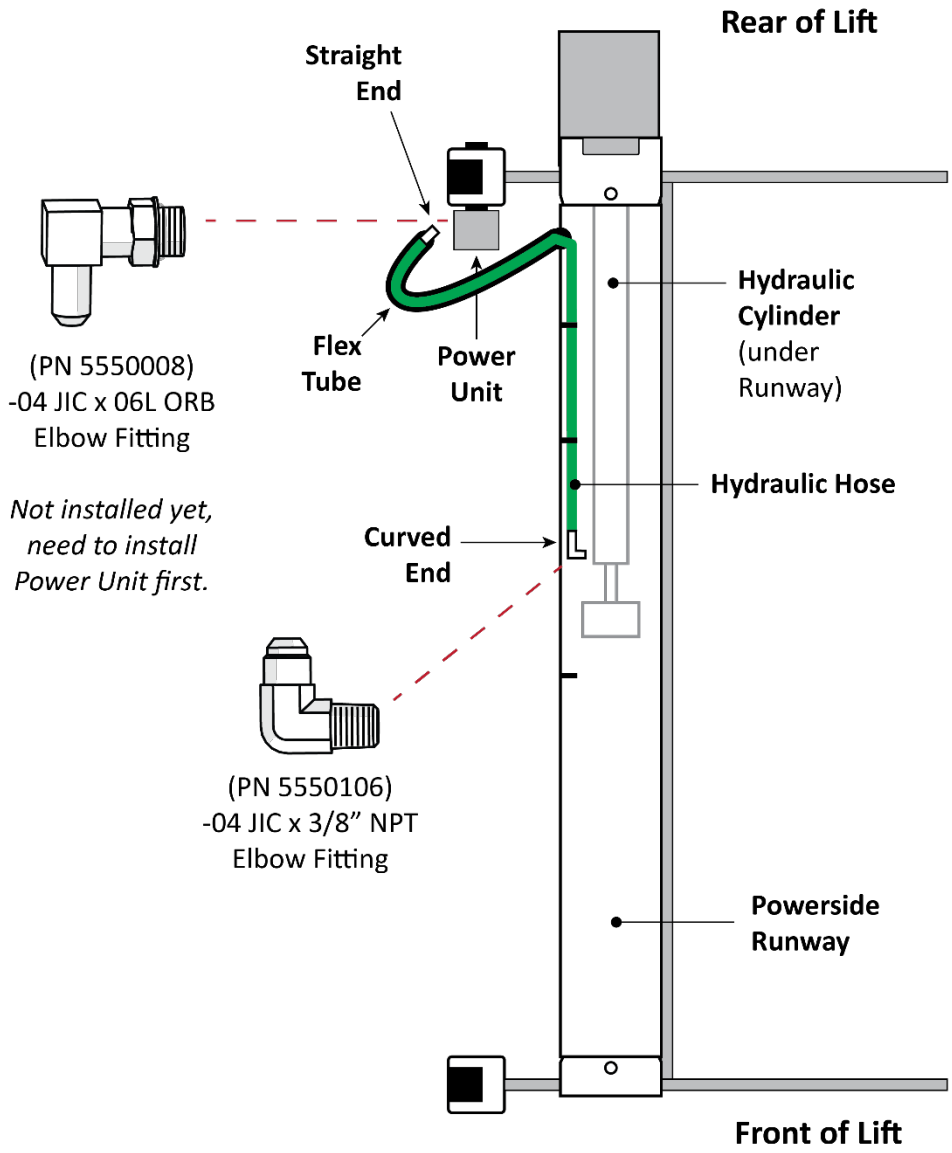

Drawing not to scale. Not all components are shown.

To install the Hydraulic Hose:

1. Find the Hydraulic Hose and a Hydraulic Elbow Fitting (5550106).
2. Prepare the Hydraulic components using the information in **Hydraulic Fluid Contamination**.
3. On the Hydraulic Cylinder, remove the Shipping Plug from the Port at the Piston Rod end.
4. Attach the NPT end of the Elbow Fitting to the Port and tighten it.

   Use Thread Sealant on NPT Threads only.

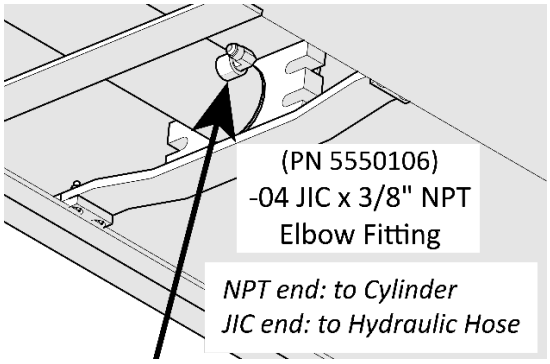

Drawing shows how to connect the Hydraulic Fitting to the Hydraulic Cylinder.

View is from underneath the Powerside Runway.

Not all components are shown.

5. Attach the Straight end of the Hydraulic Hose to the JIC end and tighten it.
6. Take the Curved end of the Hydraulic Hose and, starting at the Hydraulic Cylinder, route the Curved end through the Retaining Rings (along inside edge of the Powerside Runway) and the Flex Tube opening.

   Once done, the Curved end should be coming out of the Flex Tube opening near the Power Unit.
7. Leave the Curved end of the Hydraulic Hose coming out of the Flex Tube opening for now.

Installing the Power Unit

This section describes how to ***install***, but not make the connections to, the Power Unit for your Lift. An Electrician is ***not*** needed to install the Power Unit; one is required to connect the Power Unit to its power source.

The Power Unit ***must*** be installed on the Power Post; attach it to one of the two Mounting Brackets, whichever is more convenient for the installation.

Important: Many people install the Flex Tube Bracket Plate and/or the Zero Angle Bracket at the same time as they install the Power Unit. Read **Installing the Flex Tube** and **Installing the Pushbutton Air Valve** (the following procedure) for more information to see if this makes sense for your installation.

⚠ DANGER Risk of explosion: The Power Unit has internal arcing or parts that may spark and should not be exposed to flammable vapors. Never expose the Power Unit motor to rain or other damp environments. Damage to the motor caused by water is ***not*** covered by the warranty.

Tip The Power Unit is heavy. We recommend you have one person hold the Power Unit while another person bolts it in place.

The following drawing shows how to attach the Power Unit to the Power Post.

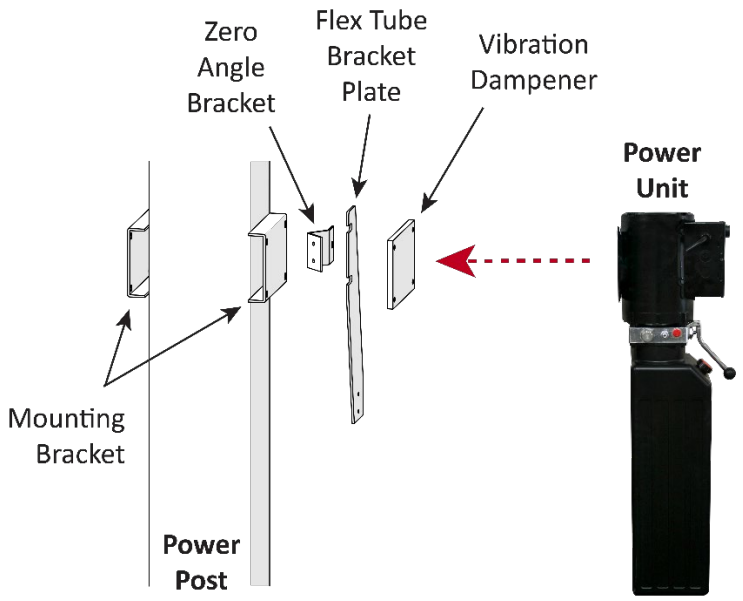

To install the Power Unit:

1. Find the Power Unit, Vibration Dampener, and supplied hardware.
2. Line up the holes on the Power Unit Back Plate and Vibration Dampener with the four holes in the Mounting Bracket you want to use.
3. Secure the Power Unit and Vibration Dampener to the Mounting Plate using four M8 x 1.25 x 25 Bolts, M8 Washers, and M8 Nuts.

Tip The Power Unit is heavy. We recommend you have one person hold the Power Unit while another person bolts it in place.

Filling the Hydraulic Fluid Reservoir

The Hydraulic Fluid Reservoir requires approximately **3.6 gallons** / **13.5 liters** of Hydraulic Fluid. The Power Unit will ***not*** work correctly until it is filled with the approved Hydraulic Fluid.

Approved fluids are any general purpose ISO-32, ISO-46, or ISO-68 Hydraulic Fluid or approved automatic transmission fluids such as Dexron III, Dexron VI, Mercon V, Mercon LV, or any synthetic Multi-Vehicle automatic transmission fluid.

⚠ **WARNING** Do not run your Power Unit without Hydraulic Fluid; you will damage it.

To fill the Hydraulic Fluid Reservoir:

1. Remove the Reservoir Cap and set it aside.

   Take care to ***keep contaminants out*** of the Hydraulic Fluid Reservoir.

2. Fill the Hydraulic Fluid Reservoir on the Power Unit with the appropriate amount of Hydraulic Fluid:

3. When the Reservoir is filled, replace the Reservoir Cap.

   Do not connect the Power Unit to a power source at this point.

Installing the Second End of the Flex Tube

To connect the Flex Tube to the Power Unit, you first need to connect the Flex Tube Bracket Plate and the Flex Tube Angle Plate.

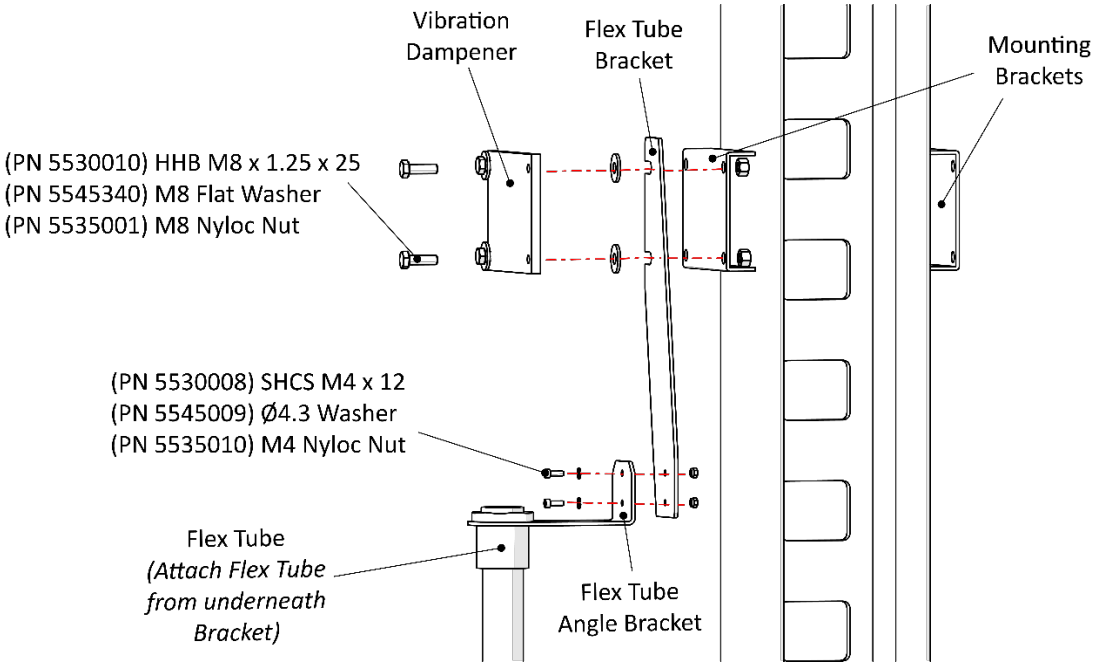

The components involved include:

- **Flex Tube Bracket Plate**. The two notches at the top attach near the Mounting Bracket on the Power Post. The two holes at the bottom connect to the Flex Tube Angle Plate.
- **Flex Tube Angle Plate**. Attaches to the Flex Tube Bracket Plate via two holes, giving you the flexibility to connect it on either side. Includes the hole to which the Flex Tube connects.

BendPak recommends orienting the Flex Tube so that the lines coming out of it are near where it connects on the Power Unit and to the Pushbutton Air Valve.

To connect the Flex Tube:

1. Find the Flex Tube Bracket Plate and the Flex Tube Angle Plate.
2. Install the Flex Tube Bracket Plate.

   Location options are: between the Mounting Bracket and the Back Plate or between the Back Plate and the retaining Nut.

   Note: It is common to install the Flex Tube Bracket Plate between the Mounting Bracket and the Back Plate. This allows the Zero Angle Bracket (which holds the Pushbutton Air Valve and is described in the next section) to be installed between the Back Plate and the retaining Nut. This configuration is common, but not required.
3. Connect the Flex Tube Angle Plate to the Flex Tube Bracket Plate using two Bolts, Washers, and Nuts. The Flex Tube Angle Plate can be connected on either side of the Flex Tube Bracket Plate.
4. When the Flex Tube Angle Plate is in place, unscrew the Plastic Collar of the Flex Tube.
5. Holding the Flex Tube by the Plastic Collar, put the Threads through the hole on the Flex Tube Angle Plate ***from underneath***.
6. Screw the Plastic Nut back onto the Threads and tighten.

Installing the Pushbutton Air Valve

The Pushbutton Air Valve is used to lower the Runways. It can go on either side of the Power Unit, but we recommend placing it on the side facing *away* from the Lift to be out of the way.

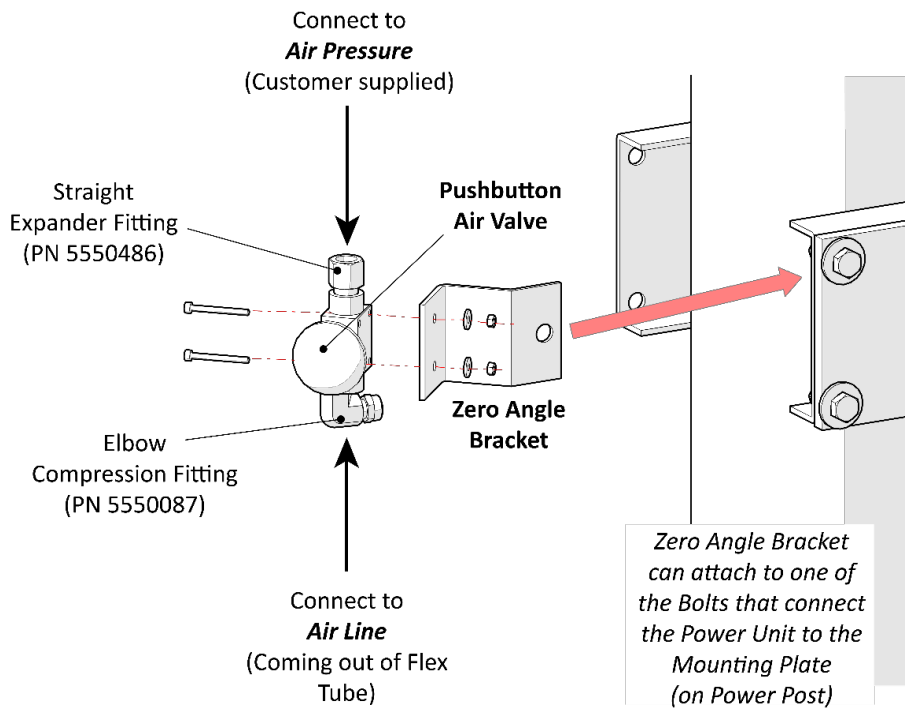

Drawing shows the Pushbutton Air Valve and its connections to the Mounting Bracket on the Power Post.

Not all components shown.

To install the Pushbutton Air Valve:

1. Find the necessary components: Zero Angle Bracket and the Pushbutton Air Valve Assembly.
2. Connect the Zero Angle Bracket at the desired location (if it has not already been connected).

   The best location is one that is visible and easily reached by the Lift operator.
3. Connect the Pushbutton Air Valve to the Zero Angle Bracket.

   Use the two holes on the Pushbutton Air Valve on the side away from the actual pushbutton. If you use the holes next to the pushbutton, the Zero Angle Bracket interferes with the pushbutton when you try to use it.
4. Connect the Air Line Compression Elbow Fitting and the Straight Expander Fitting to the appropriate locations on the Pushbutton Air Valve.

   The Elbow Fitting connects to the opening labelled **CYL**. The Straight Fitting to the opening labelled **IN**. See the drawing above.
5. Attach the Air Line to the Compression Fitting and the customer-supplied air to the Straight Fitting.

   Important: The Return Line also comes out of the Flex Tube and is the same kind of tubing as the Air Line. ***Do not attach the Return Line to the Pushbutton Air Valve by mistake***. Double check to make sure you are attaching the Air Line to the Pushbutton Air Valve.

   For the customer-supplied air pressure, a minimum of 50 to 150 psi / 3 to 25 cfm is required.

Connecting the Return Line

One end of the Return Line is already connected to the Hydraulic Cylinder; the other end of the Return Line needs to be connected to the Power Unit.

To attach the Return Line to the Power Unit:

1. Remove the Shipping Plug from the Hydraulic Return Port on the Power Unit, then attach a 04 COMP – 06 NPT Elbow Compression Fitting (PN 5550089) to the Port.

   Use Thread Sealant on NPT Threads only.

   See **Connecting the Power Source** for the possible connector locations.

2. Attach the Return Line (coming out of the Flex Tube) to the other end of the Fitting.

   For information about connection compression fittings, refer to **Working with Compression Fittings and Tubing**.

   Important: Make sure you are attaching the Return Line to the Power Unit and not the Air Line. ***Do not attach the Air Line to the Power Unit by mistake***.

Connecting the Hydraulic Hose

One end of the Hydraulic Hose is already connected to the Hydraulic Cylinder; the other end of the Hydraulic Hose needs to be connected to the Power Unit.

To connect the Hydraulic Hose to the Power Unit:

1. Locate the Hydraulic Power Port on the Power Unit you want to use and remove the Shipping Plug, then attach a 04 JIC – 06L ORB Hydraulic Fitting (PN 5550008) to the Port.

   See **Connecting the Power Source** for the possible connector locations.

2. Connect and securely tighten the ORB end of the Fitting to the Hydraulic Power Out on the Power Unit.

3. Connect and securely tighten the JIC end of the Fitting to the Hydraulic Hose.

Connecting the Power Source

The standard Power Unit for your Lift is 220 VAC, 60 Hz, single phase. The Power Unit must be connected to an appropriate power source.

Refer to **Wiring Diagrams** for wiring information.

⚠ DANGER All wiring ***must*** be performed by a licensed, certified Electrician. Do not perform any maintenance or installation on the Lift without first making sure that main electrical power has been disconnected from the Lift and ***cannot*** be re-energized until all procedures are complete. If your organization has Lockout/Tagout policies, make sure to implement them after connecting to a power source.

⚠ CAUTION Always take a break between cycles. The Power Unit's motor is ***not*** constant duty; it cannot be run continuously. Every 67 seconds of Lift use requires an off period of no less than 9 minutes.

Important electrical information:

- Improper electrical installation can damage the motor; this is not covered under warranty.
- Use a separate circuit breaker for each Power Unit.
- Protect each circuit with a time-delay fuse or circuit breaker. For a 220 VAC, single phase circuit, use a 25 amp or greater fuse.

The Hydraulic Power Ports are usually labeled **P1/P2** on the Power Unit; the Hydraulic Return Ports are commonly labeled **T1/T2** or **CV1/CV2**.

The following drawing shows the standard configuration for the Power Unit.

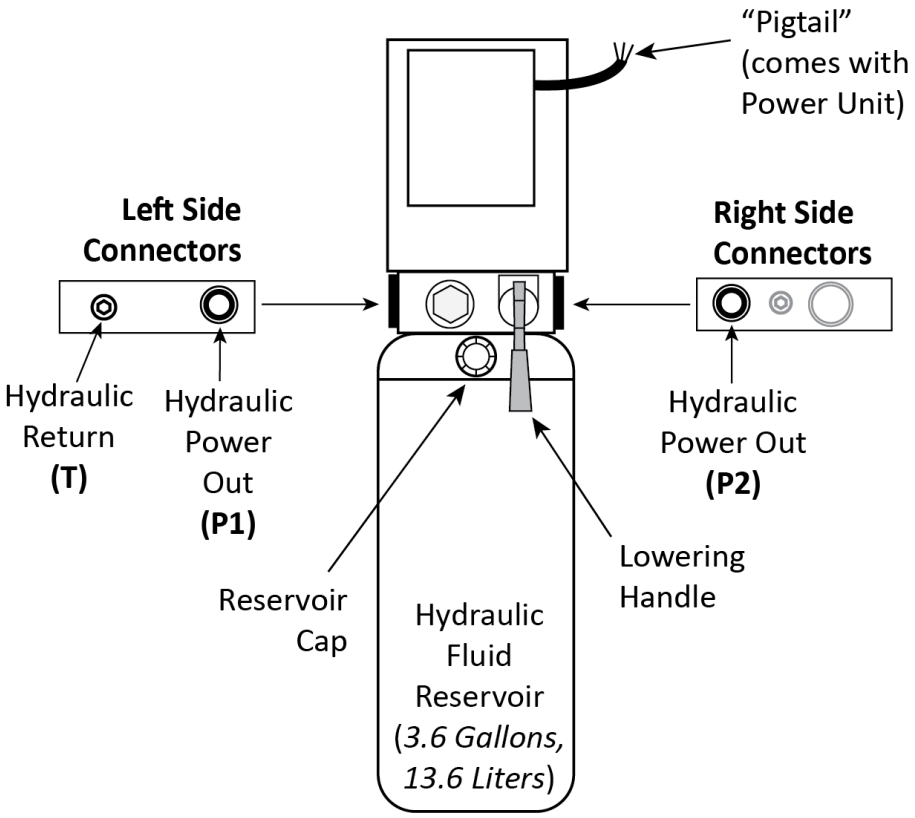

Not drawn to scale. Not all components shown.

The following drawing shows the possible connector locations, depending on the Power Unit you may have.

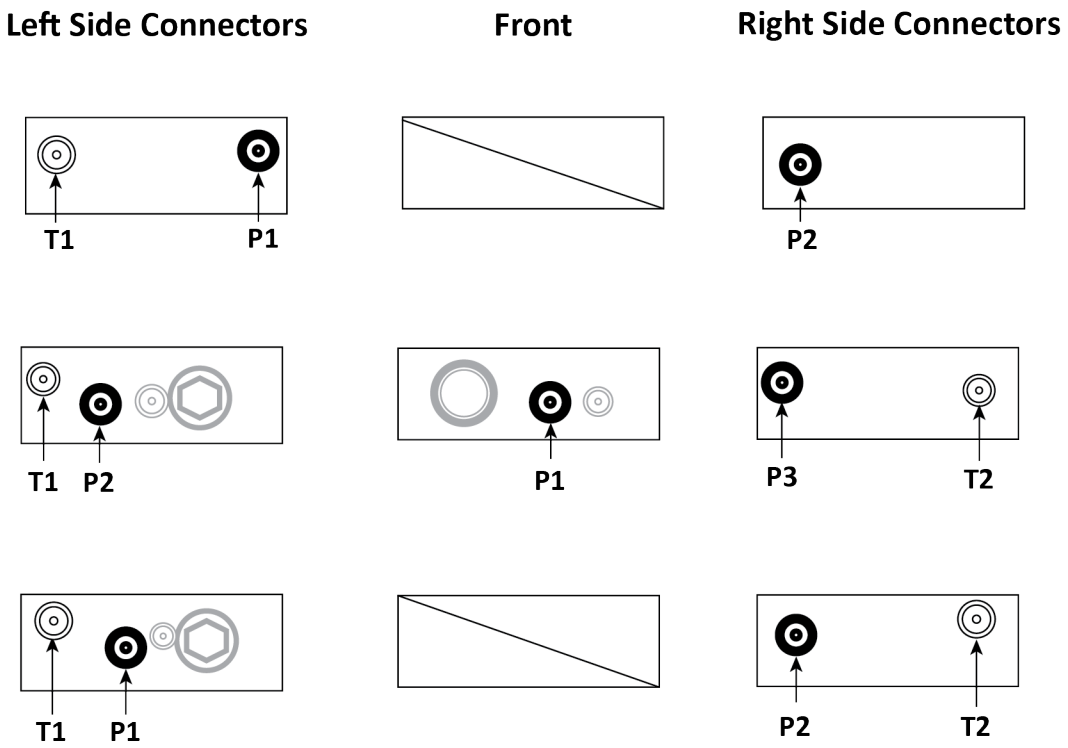

Not drawn to scale. Not all components shown.

To connect the Lift to a power source:

1. Have a certified, licensed Electrician locate the Pigtail coming out of the Electrical Box on the Power Unit.
2. Open the Electrical Box, *remove* the Pigtail, and then either:
   - Wire the Power Unit directly into the facility's electrical system.
   - Wire a Power Cord (with appropriate plug) inside the Electrical Box to the wiring that was connected to the Pigtail.

   The Power Cord and Plug are ***not*** supplied with the Lift.

   See **Wiring Diagrams** for more information.

Installing a Power Disconnect Switch

⚠ WARNING A main Power Disconnect Switch is ***not*** provided with this equipment.

A Power Disconnect Switch is a National Electrical Code (NEC) requirement. They are designed to interrupt electrical power in the event of an electrical circuit fault, emergency situation, or when equipment is undergoing service or maintenance.

You are required to install a Power Disconnect Switch that is properly rated for the incoming power.

⚠ DANGER All wiring ***must*** be performed by a licensed, certified Electrician in accordance with national and local electrical codes.

Your Power Disconnect Switch must be readily accessible and installed so that it is in easy reach of the Lift operator. It must be clearly and legibly marked to indicate its purpose.

The drawing to the right shows a toggle Power Disconnect Switch between the Lift's power source and its Power Unit. A quick flip of the switch immediately cuts power to the Lift.

Make sure to have a certified Electrician install the Power Disconnect Switch.

Make sure the electrician selects a ***UL-listed*** Power Disconnect Switch.

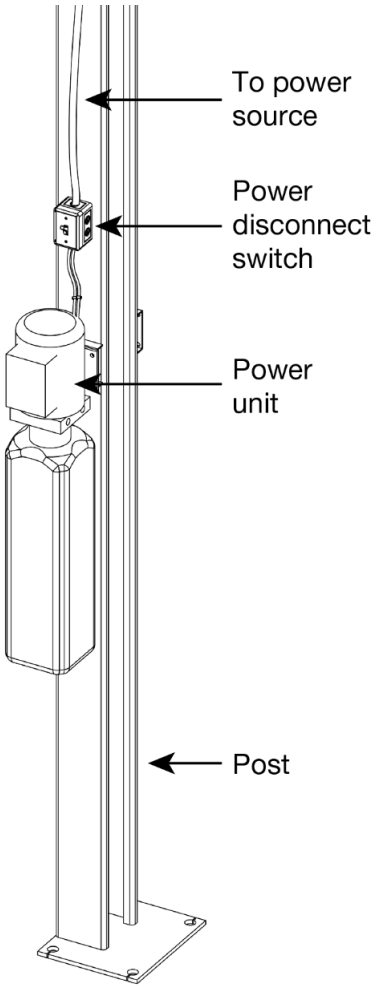

Installing a Thermal Disconnect Switch

⚠ WARNING The Lift's motor does ***not*** have thermal overload protection.

Connect a motor Thermal Disconnect Switch or overload device that will make sure the equipment shuts down in the event of an overload or an overheated motor.

⚠ DANGER All wiring ***must*** be performed by a licensed, certified Electrician in accordance with local and national electrical codes.

High electrical current that exceeds the motor's full load amps (FLA) rating may result in permanent damage to the motor.

We strongly recommend that you ***not*** exceed the rated duty cycle of the Lift's motor.

⚠ CAUTION Always take a break between cycles. The Power Unit's motor is ***not*** constant duty; it cannot be run continuously. Every 67 seconds of Lift use requires an off period of no less than 9 minutes.

About Effective Embedment

Anchor Bolts (also called Wedge Anchors) get their holding strength from how far down into the Hole the Anchor Bolt's Expansion Sleeve presses into the Concrete (called Effective Embedment) and how forcefully the Expansion Sleeve presses into the Concrete (based on the width of the hole and how much Torque is applied).

The further down into the Hole you get the Expansion Sleeve, the greater the Effective Embedment and thus the greater the holding strength of the Anchor Bolt. The hole should be drilled the same width as the Anchor Bolt with no wobbling. The correct amount of Torque is a range; too little Torque and the Anchor Bolts hold with less strength, too much Torque and you could damage the Concrete and lessen the Anchor Bolt's holding strength.

Note: Some people confuse Effective Embedment with *Nominal* Embedment, which is how far down into the Hole the *bottom* of the Anchor Bolt is. The two are ***not*** the same; Nominal Embedment does not tell you anything about the holding strength of the Anchor Bolt.

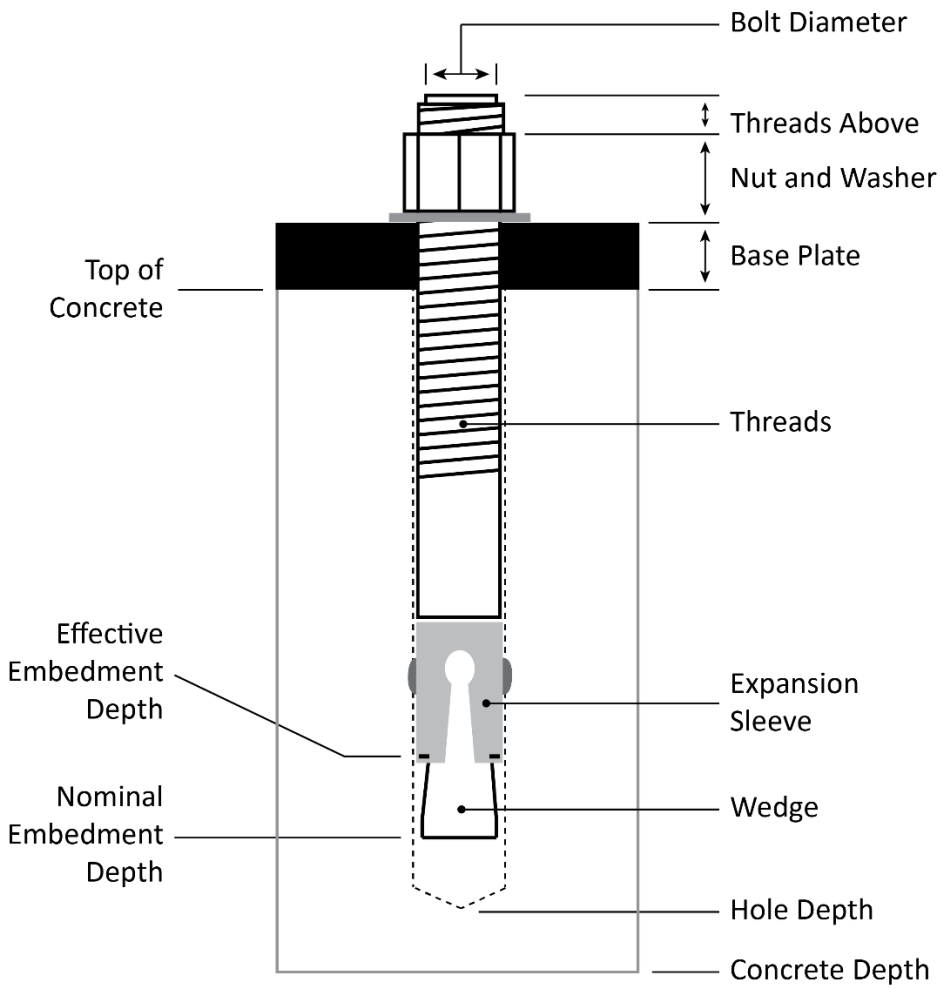

Make sure to carefully follow the specifications and instructions in the following procedure.

⚠ **WARNING** Use only the Anchor Bolts that came with your Lift. Only install your Lift on a Concrete floor. Make sure to get the correct amount of Effective Embedment and use the correct amount of Torque.

Anchoring the Posts

Install one Anchor Bolt in each corner of each Base Plate, 4 per Post, 16 Anchor Bolts total.

Concrete specifications are:

- **Depth**: 4.25 inches
- **PSI**: 3,000 PSI, minimum
- **Cured**: 28 days, minimum

Anchor Bolt specifications are:

- **Length**: 4.75 inches
- **Diameter**: .75 inch
- **Anchor torque**: 85-95 pound feet (do *not* Torque less than 80 or more than 105)

⚠ **WARNING** Your Concrete and Anchor Bolts ***must*** meet these specifications. Only install your Lift on a Concrete surface. If you install a Lift on asphalt or any other surface, or your Concrete or Anchor Bolts do not meet these specifications, it could lead to product damage, Vehicle damage, personal injury, or even death.

Dannmar Lifts are supplied with installation instructions and concrete fasteners meeting the criteria as prescribed by the American National Standard "Automotive Lifts – Safety Requirements for Construction, Testing, and Validation" ANSI/ALI ALCTV.

⚠ **WARNING** Use only the Anchor Bolts that came with your Lift. If you use components from a different source, you void your warranty and compromise the safety of everyone who installs or operates the Lift.

Lift buyers are responsible for conforming to all regional, structural, and seismic anchoring requirements specified by any other agencies and/or codes, such as the Uniform Building Code and/or International Building Code.

To anchor the Posts:

1. Locate the: four Anchor Bolts, four Nuts, and four washers you will need ***for each Post***.
2. Using the Base Plates as guides, drill the holes —one hole in each corner of the Base Plate, so four holes total per Base Plate.

⚠ **CAUTION** Do ***not*** drill all the way through the concrete; if you punch completely through the slab, you compromise the holding strength of the Anchor Bolt.

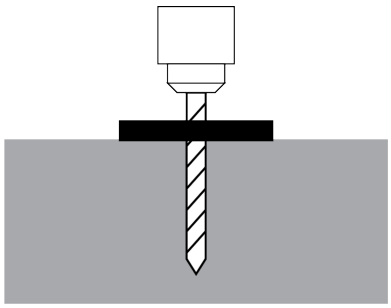

When drilling, go in straight; do not let the drill wobble.

Use a carbide bit (conforming to the current ANSI B212.15).

The diameter of the drill bit ***must*** be the same as the diameter of the Anchor Bolt. So if you are using a ¾ inch diameter Anchor Bolt, for example, use a ¾ inch diameter drill bit.

3. Vacuum each hole clean.

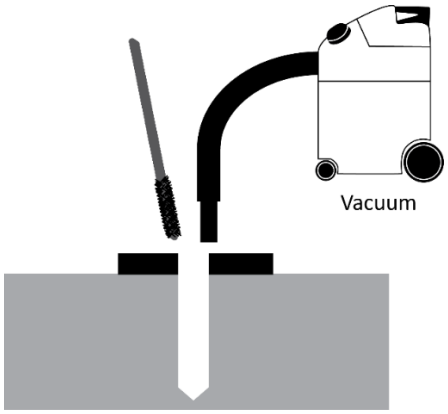

Important You must wear the proper eye protection.

You can also use a wire brush, hand pump, or compressed air; just ***make sure to thoroughly clean each hole***.

Do ***not*** ream the hole. Do ***not*** make the hole any wider than the drill bit made it.

4. Make sure the Washer and Nut are in place, ***with the top of the Nut flush with the top of the Anchor Bolt***, then insert the Anchor Bolt into the hole.
5. Hammer or mallet the Anchor Bolt down into the hole; stop hammering when the Washer is snug against the Base.

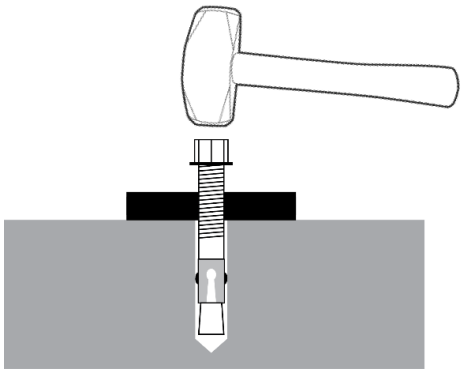

Use a hammer or mallet to get the Expansion Sleeve through the Base and down into the hole.

Even using a hammer or mallet, the Anchor Bolt should only go into the hole part of the way; *this is normal*. If the Anchor Bolt goes all the way in with little or no resistance, the hole is too wide.

Once past the hole in the Base, the Anchor Bolt eventually stops going down into the hole as the Expansion Sleeve contacts the sides of the hole; *this is normal*.

6. Plumb each Post; install any needed Shims.

   Do not shim a Post more than half an inch using the provided Shims. A maximum of 2 inches is possible by ordering optional Shim Plates. Contact Dannmar at **1 (877) 432-6627** with the model and serial number of your Lift.
7. Wrench each Nut ***clockwise*** to the recommended installation torque, 85-95 pound feet, using a Torque Wrench.

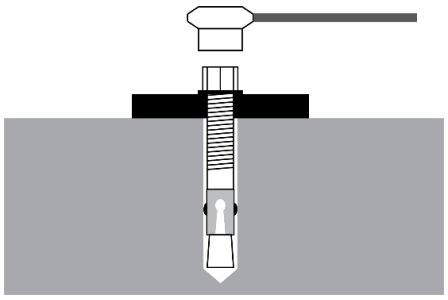

Wrenching the Nut forces the Wedge up, forcing out the Expansion Sleeve and pressing it tightly against the Concrete.

Important: Do ***not*** use an impact wrench to torque the Anchor Bolts.

Final Leveling

The following procedure describes how to adjust the level of your Lift. The goal is to adjust all four safety ladders to engage the Safety Locks at the same time.

To complete final leveling on the Lift:

1. Raise the Runways to the first Lock position (the primary Safety Locks, not the Slack Safety Locks).
2. Use a transit level or Four-Foot Level or other leveling mechanism to evaluate how level the Posts and Runways are to each other.
3. If you need to adjust a Runway, use the Top Nut and Stop Nut on the Top Cap of each Post to make adjustments to the **Safety Ladder** in that Post (which affects the level of the Runway and also when the Safety Locks engage).
4. Raise the Lift to full height, listening as the Safety Locks engage.

   If the Safety Locks are engaging at the same time, no further adjustments are necessary.

   If the Safety Locks are *not* engaging at the same time, rest the Lift on a Safety Lock and check the leveling again.

   If the level is acceptable, but the safety Locks are still not engaging at the same time, some small adjustment may be made using the Lift Cables to add or remove a little Cable slack. Raise the Lift again and listen as the Safety Locks engage.
5. When you are satisfied the Lift is level, firmly secure the Nuts at the top of each Post on the Safety Ladders and the Lift Cables.

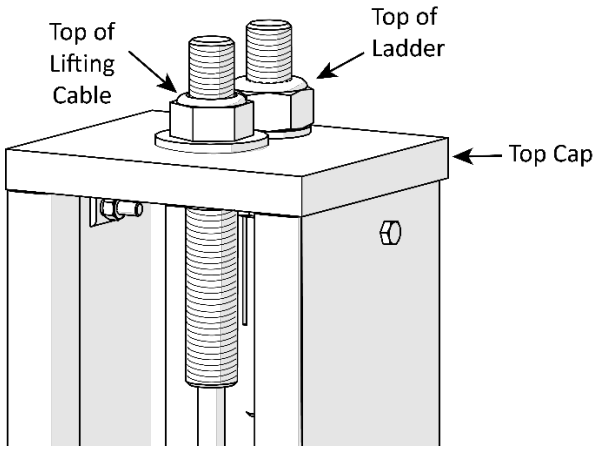

Installing Accessories

The accessories available for your Lift include:

Tire Stops

Tire Stops go at the Front of the Lift; they prevent the Tires of your Vehicle from going too forward.

To install the Tire Stops:

1. Find the two Tire Stops, four M14 x 40 Hex Head Bolts, four M14 Washers, and four M14 Nuts.
2. Put a Tire Stop in position over the front of the Runway, then secure in place with a Bolt, Washer, and Nut in each hole.

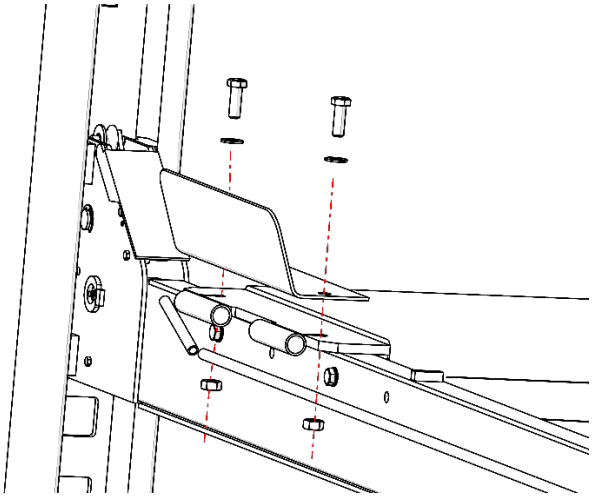

3. Repeat Steps 1 and 2 for the other Tire Stop.

Drive-up Ramps

The Lift uses Drive-up Ramps for Vehicles to be easily driven onto the Runways.

To install the Drive up Ramps:

1. Find the required components: two Ramps, two Ramp Pins, and four Rotor Clips.
2. Put a Ramp into position at the rear of the Runway, with the Ramp Tube aligned between the two tubes attached to the Runway.
3. Slide a Ramp Pin through the top Runways tubes, then put two Rotor Clips on both ends of the Ramp Pin.

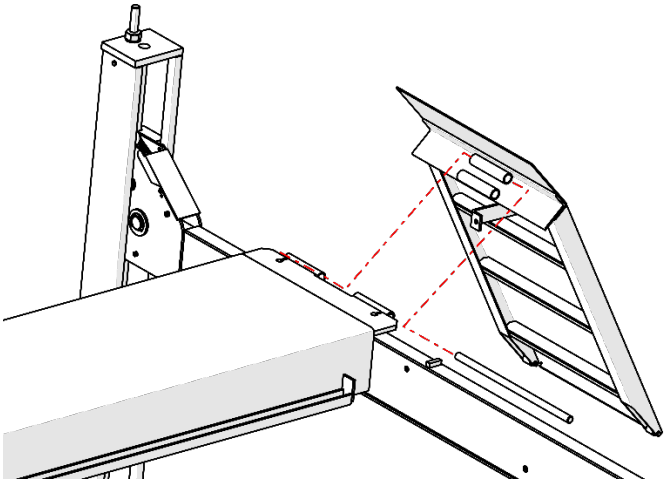

Note: The Ramps are heavy and awkward, so you may want to consider having two people install them; one to hold the Ramp, the other to put the components into place.

4. Repeat Steps 2 and 3 for the other Ramp.

Crosstube Covers

The Lift uses Crosstube Covers to protect the Gusset components.

To install the Crosstube Covers:

1. Find the four Crosstube Covers from the Parts Box.

2. Attach the Cover to the top of the Crosstube Gusset; do the same for the remaining Gussets.

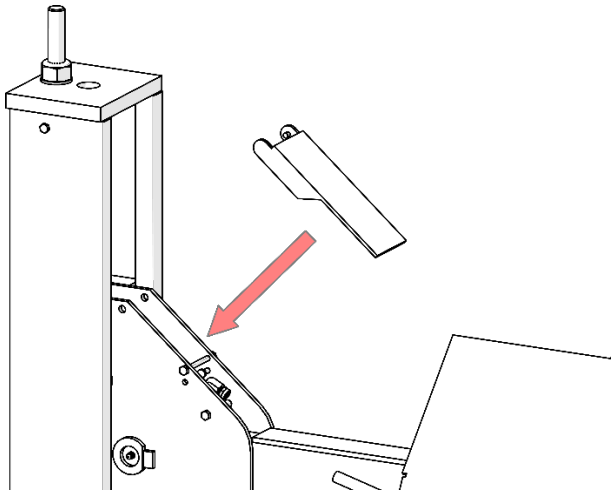

Alignment Turn Plates (D4-12A model only)

Alignment Turn Plates are used for Vehicle alignments. They are used in conjunction with a Moveable Riser to fill the lowered space at the Front of the Lift.

To install the Alignment Turn Plates:

Find the two Alignment Turn Plates, then put one in each lowered space at the front of the Runways.

The Alignment Turn Plate can go in either location in the lowered space; the Moveable Riser goes in the other location.

Put the Turn Plate closer to the front of the Lift (closer to the Tire Stops) if you are going to be doing alignments on Vehicles with shorter wheelbases; automobiles, for example.

For Vehicles with longer wheelbases (i.e. bigger trucks), put the Turn Plate closer to the Rear of the Lift. This orientation prevents Vehicles with longer wheelbases from hanging so far over the Front of the Lift that they interfere with using the Aligner.

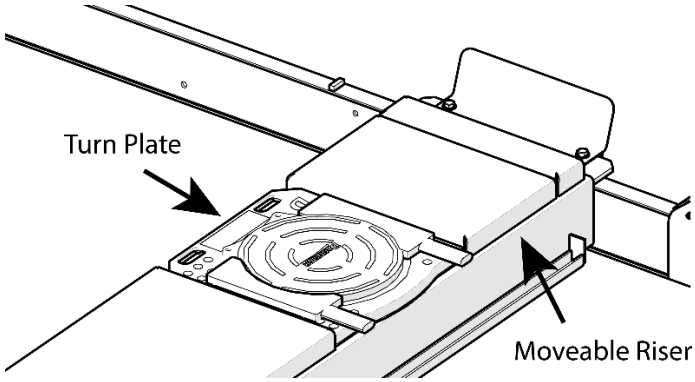

Lubricating the Lift

There are several lubrication points on the Lift; ***all of them are where the slide blocks contact the Lift, under the Powerside Lift Runway and inside the Lift Posts***.

Put a small amount of white lithium grease or similar on each lubrication area before using the Lift and monthly after putting the Lift into service.

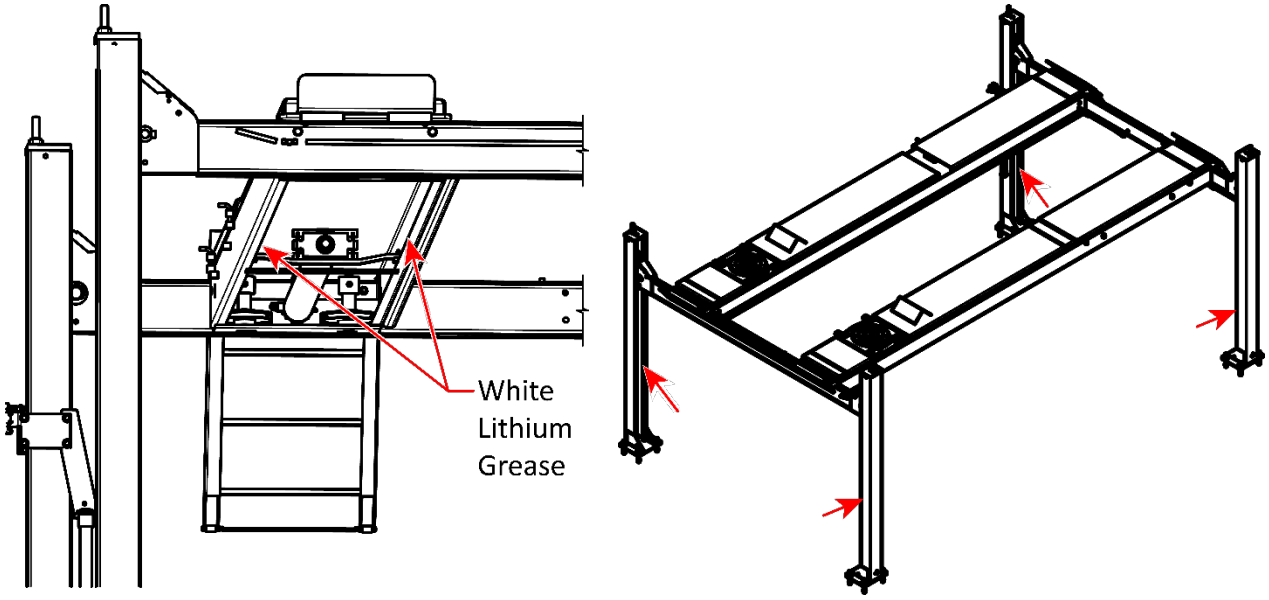

Bleeding the Hydraulic Cylinder

The Hydraulic Cylinder on the Lift is self-bleeding, which means that in most cases any air in the system can be removed by raising and lowering the Runways a few times.

⚠ **WARNING** Before performing any maintenance on your Lift, make sure the Runways are fully lowered and the power source has been completely disconnected. If your organization has Lockout/Tagout policies, make sure to implement them after connecting to the power source.

Symptoms of air in the Hydraulic System include Runways moving erratically and/or making odd noises. These could be caused by other situations; refer to **Troubleshooting** for more information.

To bleed the Hydraulic System:

1. Raise and lower the Runways up to six times; ***pause for at least one minute between each cycle***.

   The Lift's motor cannot run continuously; it is designed for regular use, but not continuous use.

2. Watch the Runways as you raise and lower them. When the Lift stops moving erratically or stops squeaking, you can stop the bleeding process.

3. Check the Hydraulic Fluid Reservoir on the Power Unit.

   Bleeding the Hydraulic System may significantly lower the amount of Hydraulic Fluid in the reservoir; add more Hydraulic Fluid if necessary.

   If your Lift is still moving erratically or making odd noises after bleeding the Hydraulic System, refer to **Troubleshooting** for more information.

Test the Lift

An Operational Test of your Lift with a standard Vehicle on the Runways before starting normal service is required (a typical Vehicle is not required, but is recommended).

Note: Residual air in the Hydraulic System can cause the Lift to shake, move erratically, or squeak when you start using the Lift; this is normal. The Lift is Self-Bleeding and any strange noises and movements should reduce and disappear as you run the Lift up and down. If it does not go away soon, try bleeding the Cylinder of air. If it still does not go away, refer to **Troubleshooting** for additional information.

To test your Lift:

1. Before you start using your Lift, verify the area is clear of personnel, pets, or obstructions that may be in the path of the Lift as you raise and lower it.

2. Drive the Vehicle onto the Runways; try to center the Vehicle's Tires in the middle of each Runway.

   Put the Vehicle into park, put on the parking brake, put it in gear if it is a manual transmission, and chock the wheels.

3. Press and hold the **Up** button.

4. After the Runways pass three or four Safety Locks (you will hear them), release the **Up** button.

5. Press and hold the pushbutton on the Pushbutton Air Valve, then press and hold the Lowering Handle.

⚠ **CAUTION** ***Never leave the Lift without making sure that all four Safety Locks have engaged on locking positions at the same height***. If one of the four Safety Locks do not fully engage, the Runways will not be level and you could risk damaging any Vehicles sitting on or underneath the Runways.

6. Press the **Up** button for a few seconds to disengage the Runways from the Safety Locks, then release the **Up** button.
7. Press and hold the Pushbutton Air Valve, then press and hold the Lowering Handle.
8. When the Runways reach the ground, release the Lowering Handle. Wait for one minute.

⚠ **CAUTION** Always take a break between cycles. The Power Unit's motor is ***not*** constant duty; it cannot be run continuously. Every 67 seconds of Lift use requires an off period of no less than 9 minutes.

9. Repeat the process, this time raising the Runways to a higher Safety Lock.
10. If the Lift is working without shaking, moving erratically, or squeaking, there is no need to repeat the procedure.

    If the Lift is shaking, moving erratically, or squeaking (which is normal during the start-up period), repeat the procedure a couple more times, with at least a one-minute break between cycles.

If you continue to have issues, refer to **Troubleshooting** for assistance.

Final Checklist

Make sure these things have been done ***before*** putting the Lift into service:

- Review the **Installation Checklist** to make sure all steps have been performed.
- Make sure the Power Unit is getting power from the power source.
- Check the Hydraulic Fluid Reservoir on the Power Unit; it must be full of approved Hydraulic Fluid or automatic transmission fluid. ***You can damage the motor by running it without enough fluid.***
- Check the Hydraulic System for leaks. Check for any loose Hydraulic Fittings and Auxiliary Port Plugs. Inspect for pinched or damaged Hydraulic Hoses and replace them ***before*** operation.
- Make sure all four Posts are properly anchored, shimmed, level, and stable.
- Make sure all Cables are properly seated in their Sheaves.
- Make sure all Safety Locks are operating normally. Make sure nothing is interfering with the Safety Locks.
- Make sure the backup Slack Safety Locks are ***not*** engaged.
- If it has not been done already, perform an Operational Test of the Lift with a typical Vehicle. Refer to **Test the Lift**.

Leave the Manual with the Owner/Operator

Make sure to leave the *Installation and Operation Manual* with the owner/operator so that it is available for anyone who needs to read it.

Outdoor usage

Your Lift is designed for indoor use, but if you decide to use it *outside*, here's what you should know:

- **You may void your warranty**. Damages to the Motor or rusted components on the Lift caused by outdoor elements are not covered by warranty.
- **Cover the Lift**. Use a canopy or something similar to block the Lift from the sun and any precipitation, reducing the impact weather and oxidation.
- **Protect the Power Unit**. ***This one is really important***. The Power Unit has an electric motor, so if that motor gets wets, it is possible for someone to get electrocuted, a fire can start, and most certainly the motor will short circuit and stop functioning. This is ***not*** covered by the warranty. Always keep the Power Unit and all wiring covered, clean, and dry.
- **Increase the Maintenance**. Placing your Lift outside subjects it to the outdoor elements like wind, rain, dust, sunlight, snow, and other corrosive elements; you will need to double the maintenance on your Lift to minimize the impact from it being outside. For example, if the maintenance suggests doing something weekly, then do it 2-3 times a week.
- **Increase the Replacement Parts**. Everything on the Lift breaks down faster if the Lift is outside, so be prepared to order replacement parts much sooner than with indoor Lifts.

Operation

This section describes how to operate your Lift.

Safety Considerations

Do the following every time ***before*** you raise a Vehicle on your Lift:

- **Check the Lift**. Walk all the way around the Lift, checking for any missing, heavily worn, or damaged parts. Do not operate the Lift if you find any issues; instead, take it out of service, then contact your dealer, email **support@dannmar.com**, or call **1 (877) 432-6627**.
- **Check the area**. Keep the area around and under the Lift clean and free of obstructions; anything that could cause a problem. Do not forget to check ***above*** the Lift. If you find an obstruction, move it out of the way. If you find any other issues, resolve them before using the Lift. Do not allow any people or animals within 30 feet of the Lift while it is in motion.
- **Check the operators**. Make sure everyone who is going to operate the Lift has been trained in its use, has read the labels on the unit, and has read the manual. Only the operator at the Controls should be within 10 feet of the Lift when it is in motion.

  Do not allow children to operate the Lift. Do not allow anyone under the influence of drugs, alcohol, or medication to operate the Lift. Do not allow any unauthorized personnel to operate the Lift.
- **Check for safety**. Make sure everyone who is going to be walking near the Lift is aware of its presence and takes appropriate safety measures. Only put Vehicles on the Runways.

  When raising a Vehicle, do not leave it until the Platform is engaged on a Safety Lock. When lowering the Lift, do not leave it until it is on the ground.
- **Check the Vehicle**. Never exceed the Lift's weight rating. Do not allow people inside a Vehicle you are going to raise. Double check you have everything you need out of the Vehicle before raising the Lift. Make sure the Vehicle is not overbalanced on either end or either side.

Using the Controls

The Controls for your Lift include:

- **Up button**. Press and hold to raise the Runways. Located near the top of the Power Unit.

  To put Runways onto a Safety Lock position: Raise the Runways a little above where you want them, then press and hold the Lowering Handle to back the Runways down onto the Safety Locks position (do not press and hold the pushbutton on the Pushbutton Air Valve). When the Runways stop going down, they are engaged on a Safety Lock.

  Before leaving the Lift, make sure all four corners are engaged on their Safety Locks.

- **Lowering Handle**. Press and hold to lower the Runways. Located in the middle of the Power Unit, the Lowering Handle is long and has a ball at the end.

  To lower raised Runways down to the ground: ***press and hold*** the Pushbutton on the Pushbutton Air Valve first, then ***press and hold*** the Lowering Handle.

  Watch the Runways as they go down to make sure they are coming down evenly. If they are not, stop lowering the Lift and troubleshoot the problem.

⚠ **WARNING** Only leave the Runways either engaged on a Safety Lock position or fully lowered.

- **Pushbutton Air Valve**. Press and hold the Pushbutton on the Pushbutton Air Valve as part of the process to lower the Runways. Located on one side or the other of the Power Unit (depending on where it was installed). Pressing and holding the Pushbutton on the Pushbutton Air Valve disengages the Safety Locks, which is needed to lower the Runways.

To raise Runways to a Safety Lock:

1. Press and hold **Up** Button.
2. When just past desired height, release **Up** Button.
3. Press and hold Lowering Handle.
4. Runways stop going down when engaged on a Safety Lock; release Lowering Handle when they stop.

   Do not press and hold Pushbutton.

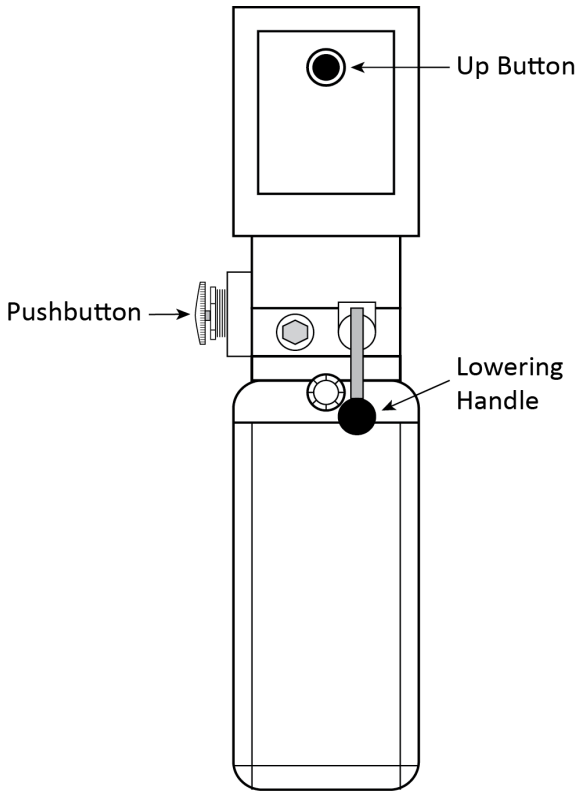

To lower Runways:

1. Press the **Up** Button for a second or two.

   This disengages the Runways from the Safety Locks.
2. Press and hold Pushbutton Air Valve *and* Lowering Handle ***at the same time***.

   Runways begin lowering.
3. When Runways are fully lowered, release Pushbutton and Lowering Handle.
4. Drive Vehicle off Runways.

Raising and Lowering Vehicles

Keep the following in mind when operating your Lift:

- **Be safe**. Make sure to check for people, pets, and objects that might be in the path of the Lift as you raise or lower it. If there is something in the way, stop the Lift and move it out of the way. Watch the Lift carefully as it raises and lowers.

⚠ **DANGER** Pay careful attention when you are raising or lowering your Lift. If a person or pet gets stuck under the Lift, they could be injured or, in rare cases, killed.

- **The Power Disconnect Switch exists for a reason**. We hope you never have to use it, but if something unexpected happens, use the **Power Disconnect Switch** to immediately stop the Lift from moving.
- **Get what you need out of the Vehicle before lifting it**. It is frustrating to raise a Vehicle and then realize you left something inside. ***Never raise your Lift with people in the Vehicle***.
- **Make sure the Vehicle is balanced**. If there is extra weight on one end or the other, remove it or balance it before raising the Vehicle.
- **Center the Vehicle's wheels on the Runway**. Centered wheels keep the Vehicle balanced.

To raise a Vehicle:

1. Make sure the Runways are on the ground. If they are not, move them to the ground.
2. Drive the Vehicle onto the Runways, then put the Vehicle into park and put on the parking brake.

   If your Vehicle has a manual transmission, place the transmission in first gear, not in neutral.
3. Chock the Tires.
4. Walk around the Lift to make sure no obstructions will interfere with the Vehicle being lifted.
5. Press and hold the **Up** button.
6. When the Runways get to the desired locking position, go up a little bit more, then release the **Up** button and *Press and hold* the Lowering Handle.

⚠ **WARNING** Only leave your Lift either engaged on Safety Locks or fully lowered.

7. With the Runways engaged on the Safety Locks, check around the Vehicle to make sure everything looks good.

   If you see anything wrong, fix it before anyone gets near the Runways or goes under them.

To lower a Vehicle:

1. Double check that no one except the Lift operator is within 10 feet of the Lift.
2. Press the **Up** button to disengage the Runways from the Safety Locks.

   After a second or two, release the **Up** button.
3. Press and hold the Pushbutton Air Valve ***and*** the Lowering Handle *at the same time*.
4. Lower the Runways all the way to the ground, then release the Pushbutton Air Valve and the Lowering Handle.
5. Remove the Tire Chocks, then carefully drive the Vehicle off the Runways.

Maintenance

⚠ **DANGER** Before performing any maintenance, make sure the Lift is completely disconnected from power and ***cannot*** be re-energized until all maintenance is complete. If the power is re-energized during maintenance, you or someone else could be electrocuted. BendPak strongly recommends using your Power Disconnect Switch during maintenance.

If your organization has Lockout/Tag Out policies, be sure to implement them to ensure no-one can start the Lift while maintenance is in process.

Read your manual and understand how this equipment works before using, maintaining or repairing. Routine maintenance and adjustments are the responsibility of the owner/user and are not covered under warranty.

Routine maintenance and adjustments should be carried out on a regular basis. *Unless stated otherwise, all maintenance may be performed by the owner/employer and does not require trained lift service personnel*. Replace worn, damaged or broken parts with original BendPak or BendPak approved parts or with parts that meet or exceed the original specifications.

Unless stated otherwise, all maintenance can be performed by the owner/employer and does not require trained lift service personnel.

To maintain your Lift:

- **Daily**: Keep the Lift clean. Wipe up any spills, clean any dirt.
- **Daily**: Make a visual inspection of all moving parts and check for damage or excessive wear. Replace any damaged or worn parts before using the Lift.

⚠ **DANGER** Do not use the Lift if the Cables are damaged or extremely worn. If a Vehicle is raised when you notice the damage or extreme wear, very carefully lower the Vehicle to the ground. When the Lift is on the ground, take it out of service, disconnect it from power, and make arrangements to fix the damage or wear. Service and maintain the unit only with factory-approved replacements parts.

- **Daily**: Make sure all Safety Locks are in good operating condition. Do not use your Lift if the Safety Locks are damaged or excessively worn.
- **Monthly**: Check all labels on the Lift. Replace them if they are illegible or missing.
- **Monthly**: Grease all lubrication points on the Lift. See **Lubricating the Lift** for more information.
- **Monthly**: Check Hydraulic Fluid levels. Refill if low.
- **Monthly**: Lubricate the wire rope (Cables). Use a wire-rope lubricant such as 90-WT gear oil or ALMASOL® Wire Rope Lubricant.
- **Monthly**: Check cable connections, bolts, and pins for proper mounting and torque.
- **Every two months**: Check all Anchor Bolts to make sure they are properly torqued. If they are loose, tighten them.
- **As needed**. Take the Lift out of service and then replace the Lifting Cables if there are signs of damage or extreme wear.

⚠ **WARNING** Do not operate your Lift if you find maintenance issues; instead, take the Lift out of service, then contact your dealer, visit **dannmar.com/support**, email **support@dannmar.com**, or call **1 (877) 432-6627**.

Wire Rope Inspection and Maintenance

Your Lift's Cables, which are wire rope, should be inspected regularly:

- Wire rope should be replaced when there are visible signs of damage or extreme wear. *Do not use the Lift if it has damaged or worn Cables*; ***take it out of service!***

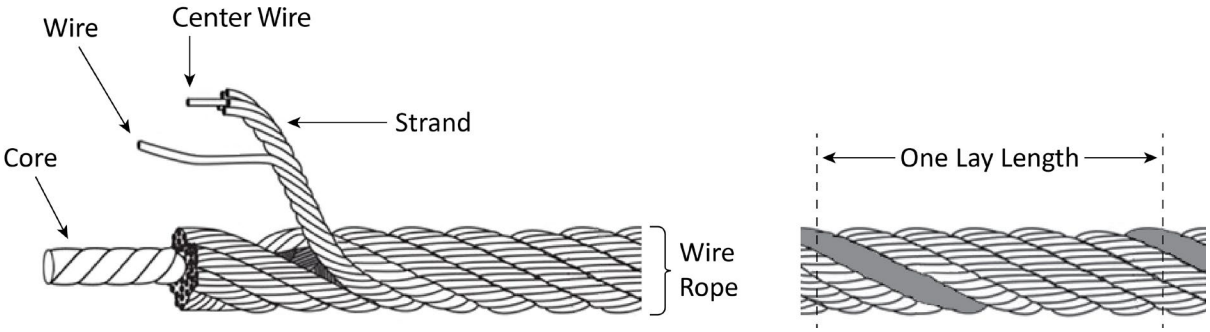

- Wire rope should be maintained in a well-lubricated condition at all times.

  Wire rope is only fully protected when each wire strand is lubricated both internally and externally. Excessive wear shortens the life of wire rope. Use a wire-rope lubricant that penetrates to the core of the rope and provides long-term lubrication between each individual strand, such as 90-WT gear oil or ALMASOL® Wire Rope Lubricant. To make sure that the inner layers of the rope remain well lubricated, lubrication should be done at least every three months during normal operation.

- All Sheaves and guide rollers that contact moving wire rope should be given regular visual checks for surface wear and lubricated to make sure they run freely. This should be done every three months during normal operation.

  For all sheave axles, use standard wheel bearing grease. For all Sheaves and/or guide rollers, use 90-WT gear oil or a similar heavy lubricant, applied by any method including pump/spray dispensing, brush, hand, or swabbing.

- How often should you inspect?

  Wire rope should be visually inspected at least once each day when in use, as suggested by American Petroleum Institute's Recommended Practice 54 guidelines. Any wire rope that meets the criteria for removal must be immediately replaced.

- When should you replace wire rope due to broken wires?

  Wire rope should be removed from service if you see six randomly distributed broken wires within any one lay length (where a single strand makes a full turn around the rope) or three broken wires in one strand within one lay length.

- Are there other reasons to replace your wire rope?

  Yes. Corrosion that pits the wires and/or connectors, evidence of kinking, crushing, cutting, bird-caging, or a popped core, wear that exceeds 10% of a wire's original diameter, or heat damage.

- How do you find broken wires?

  a. Relax your rope to a stationary position and move the pick-up points off the Sheaves. Clean the surface of the rope with a cloth — a wire brush, if necessary — so you can see any breaks.

  b. Flex the rope to expose any broken wires hidden in the valleys between the strands.

  c. Visually check for any broken wires. One way to check for crown breaks is to run a cloth along the rope to check for possible snags.

  d. With an awl, probe between wires and strands and raise any wires that appear loose.

Troubleshooting

This section describes how to troubleshoot your Lift.

⚠ **WARNING** If your Lift is ***not*** functioning correctly, ***you must take it out of service until it is fixed***. All repair work must be done by qualified personnel. If your organization has Lockout/Tagout policies, make sure to implement them after connecting to the power source.

Runways are stuck in the raised position and will not lower with the vehicle on the Lift.	Verify all sections of the Air Line are connected and not leaking. Verify the Power Unit is being supplied electrical power and that none of the Hydraulic Hoses are pinched or leaking. Verify there is sufficient Hydraulic Fluid in the Reservoir on the Power Unit. Verify the Power Unit is being supplied power. Contact BendPak Service **bendpak.com/support**, or call **(800) 253-2363**, extension 196.
One corner of a Platform is lower than the other three corners.	The Safety Lock on the lower corner is not engaged. Raise the Runways up, then lower them down onto the Safety Locks. Check to make sure all four Safety Locks are engaged on Safety Locks of the same height. Remove the vehicle and level the runways.
Runways move erratically or squeak when in use.	Move the Runways up and down a few times to flush any residual air from the Hydraulic System. Make sure to pause for at least 2 minutes between cycles.
Runways do not stay up.	Check for leaking Hydraulic Fluid. Make sure the Runways are left on their Safety Locks.
Motor not running.	Check the connection to the power source; make sure it is plugged in and of the appropriate voltage. Check the wiring diagram.
Hydraulic Fluid is dirty.	Replace the dirty fluid with clean, approved Hydraulic Fluid.
Runways make odd noises.	Lubricate the Bushings on the Sheaves on the sides of the Crosstubes using white lithium grease. If the Lift is new, a break-in period may be needed; run the Lift several times each day. If the noises persist, contact Dannmar Support.

If you continue to have issues with your Lift, take it out of service, then contact your dealer, go to **dannmar.com/support**, email **support@dannmar.com**, or call **1 (877) 432-6627**.

Wiring Diagrams

5585280

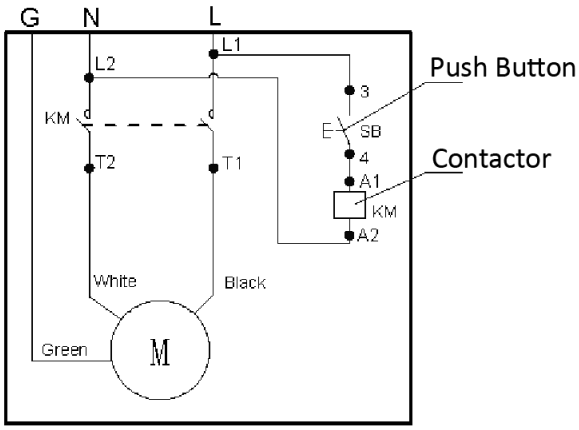

5585780

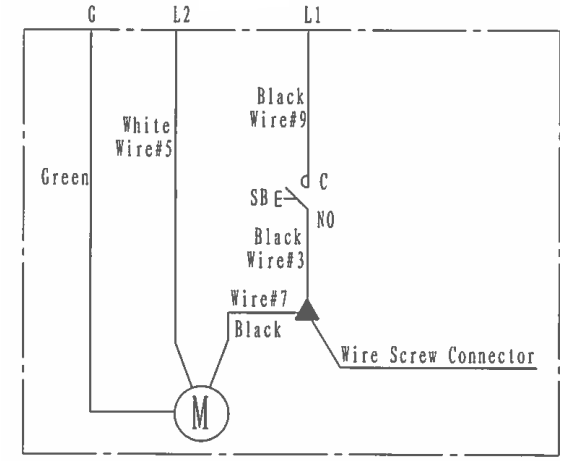

5585079

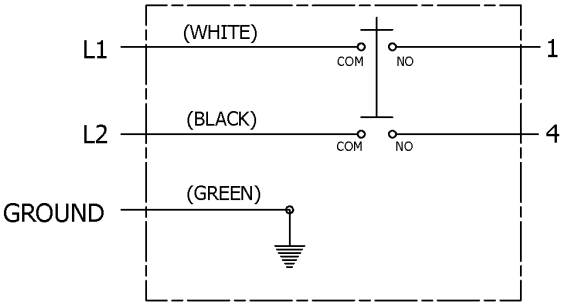

WIRED 208-230 VAC

5585176

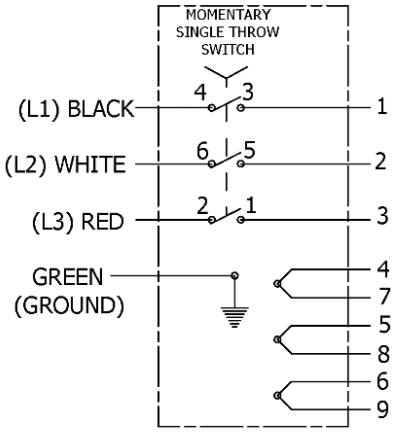

ELECTRICAL SCHEMATIC

Labels

A

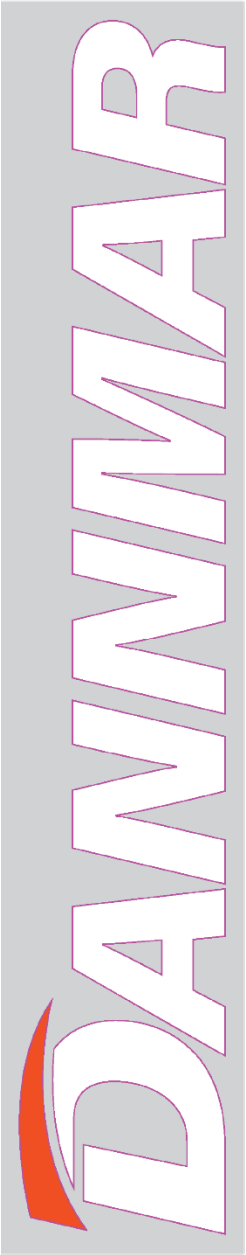

B

C

DANGER

VISUALLY CONFIRM THAT ALL PRIMARY SAFETY LOCKS ARE ENGAGED BEFORE ENTERING WORK AREA.

Suspension components on this lift are intended to raise and lower lift; they are NOT load-holding devices. Do not go under an elevated lift until visual confirmation is made that the lift is engaged on its Safety Locks. Refer to the manual for proper Safety Lock procedures and additional instructions.

VÉRIFIER VISUELLEMENT QUE TOUS LES VERROUS DE SÉCURITÉ PRIMAIRES SONT ENGAGÉS AVANT D'ENTRER DANS LA ZONE DE TRAVAIL.

Les composants de suspension de cet élévateur sont destinés à élever et abaisser l'ascenseur; ce ne sont PAS des dispositifs de maintien de la charge. Ne passez pas sous un ascenseur surélevé avant d'avoir obtenu la confirmation visuelle que l'ascenseur est engagé sur ses serrures de sécurité. Reportez-vous au manuel pour connaître les procédures de verrouillage de sécurité et les instructions supplémentaires.

WARNING

Wire Rope Inspection and Maintenance

- Replace lifting cables if there is damage is evident, such as excessive broken strands, kinks, deformities, or areas of heavy abrasion.
- Keep wire rope in a well-lubricated condition **at all times.** Wire rope is only fully protected when each wire strand is lubricated, both internally and externally. Excessive wear shortens the life of wire rope. Use wire rope lubricant that penetrates to the core of the rope and provides long-term lubrication between individual strands. Lubrication should be done at least every three months during normal operation.
- All sheaves and guide rollers in contact with the moving wire rope should be given regular visual checks for surface wear and lubricated to make sure they run free. This should be done at least every three months during normal operation. For sheave axles, use standard wheel-bearing grease. For all sheaves and/or guide rollers, use 90-WT gear oil or similar heavy lubricant applied by any method including pump/spray dispensing, brush, hand, and/or swabbing.

Failure to read, understand, and follow these instructions may cause death or serious injury. Read and understand these instructions before using lift.

ATTENTION

Inspection et maintenance des câbles

- Remplacez les câbles de levage si l'usure ou des dommages sont évidents tels que des brins cassés, des fentes, des déformations ou des zones de forte abrasion excessives.
- Gardez le câble métallique bien lubrifié **en tout temps.** Le câble métallique n'est entièrement protégé que lorsque chaque toron et fil de fil, à la fois à l'intérieur et à l'extérieur. Une usure excessive raccourcit la durée de vie du câble. Utilisez un lubrifiant pour câble métallique qui pénètre dans le noyau du câble et assure une lubrification à long terme entre les torons. La lubrification doit être effectuée au moins tous les trois mois en fonctionnement normal.
- Toutes les poulies et les galets de guidage en contact avec le câble métallique en mouvement doivent être soumis à des contrôles visuels réguliers de l'usure de la surface et lubrifiés pour s'assurer qu'ils fonctionnent librement. Cela devrait être fait au moins tous les trois mois pendant le fonctionnement normal. Pour les essieux de poulie, utilisez de la graisse standard pour roulement de roue. Pour toutes les poulies et / ou les galets de guidage, utilisez de l'huile pour engrenages 90-WT ou un lubrifiant lourd similaire, appliqué selon n'importe quelle méthode y compris la distribution par pompe / spray, brosse, main et / ou écouvillonnage.

Lisez et comprenez ces instructions avant d'utiliser l'ascenseur. Ne pas lire, comprendre et suivre ces instructions peut provoquer des blessures graves, voire mortelles.

IMPORTANT
OPERATION / MAINTENANCE INSTRUCTIONS - PLEASE READ

TO RAISE LIFT

- ✓ Position vehicle/chassis at the center of each Platform.
- ✓ Set parking brake or chock wheels to hold vehicle in position.
- ✓ Before raising vehicle, be sure all personnel are clear of lift and surrounding area. Pay special attention to overhead clearance.
- ✓ Raise lift to desired height by pressing pushbutton on power unit.
- ✓ Maintain visual contact with vehicle and surrounding areas at all times while raising lift.
- ✓ **Stop Immediately** if vehicle or lift is becoming unstable.
- ✓ After vehicle is raised to desired height, lower lift onto the nearest Safety Lock. Do not allow carriage to bounce excessively back.
- ✓ Always make sure all **Primary Safety Locks are engaged** before entering work area.

TO LOWER LIFT

- ✓ Make sure all personnel, tools, and equipment are clear of lift and surrounding area.
- ✓ Raise lift by pressing pushbutton on power unit. Elevate lift to level high enough to allow adequate clearance to locks to clear.
- ✓ Press and hold Pushbutton Switch.
- ✓ Lower vehicle onto lower screwing and holding Lowering Handle.
- ✓ When lowering lift, make sure that all personnel and objects are kept clear.
- ✓ **Always** keep a sound eye on lift while lowering.
- ✓ **Always** make sure safety locks are disengaged. If one of the locks inadvertently engages ahead, lift and/or vehicle may disrupt causing personal injury or death.

REQUIRED MONTHLY MAINTENANCE

- ✓ Consult repair manual for factory recommended maintenance.
- ✓ Adjust lift cables to ensure lift accesses level and Safety Locks engage simultaneously.
- ✓ Check all chains/cable connections, bolts and pins to ensure proper mounting.
- ✓ Visually inspect Safety Locks for proper operation.
- ✓ Visually inspect carriage. Do not use lift if carriage shows signs of breakage or other deterioration.
- ✓ Inspect all anchor bolts; tighten as necessary.
- ✓ Check pads for excessive wear and punch.
- ✓ Inspect all bolts and other fasteners to make sure they are properly secured.
- ✓ Make visual inspection of all moving parts and check for signs of excessive wear.
- ✓ Replace all faulty parts before lift is put back into operation.

WARNING

- **Warning:** If anchor bolts are loose, or any component of the lift is defective, do not use lift! It is not safe under these conditions.
- Never operate the lift with people or equipment under it.
- Never exceed rated capacity.
- Always make Safety Locks are engaged before any attempt is made to work on or near vehicle.
- Do not leave lift unattended unless engaged on Safety Locks.
- Do not permit the check or repair to go until lifting carriage caused by dangerous lack of control. By the warranty.

BendPak Inc.® PN 5900246

ATTENTION

- **Avertissement:** si les boulons d'ancrage sont desserrés ou si l'un des composants de l'élévateur est défectueux, **n'utilisez pas d'élévateur!** Ce n'est pas sûr dans ces conditions.
- Ne faites jamais fonctionner l'ascenseur avec des personnes ou des équipements dessous.
- Ne laissez pas sans surveillance tant qu'il est engagé sur les serrures de sécurité.
- Ne laissez pas le chariot d'entretien ou de réparation se produire tant que le levage ou la mauvaise utilisation causée par le manque de contrôle dangereux n'est pas couverte par la garantie.

D

BendPak PROVIDING AUTOMOTIVE SERVICE SOLUTIONS

SANTA PAULA, CA USA
WWW.BENDPAK.COM
PN 5905940

LIFT TYPE: SURFACE MOUNT — **MFG. BPK SEE DATA PLATE FOR PRODUCT DETAILS**

POWER: ELECTRIC/HYDRAULIC — **INSTALLATION - SEE OWNERS GUIDE OR CONTACT FACTORY**

SAFETY INSTRUCTIONS: IF ATTACHMENTS, ACCESSORIES OR CONFIGURATION MODIFYING COMPONENTS THAT ARE LOCATED IN THE LOAD PATH, AFFECT OPERATION OF THE LIFT, AFFECT THE LIFT ELECTRICAL LISTING OR AFFECT INTENDED VEHICLE ACCOMMODATION ARE USED ON THIS LIFT AND, IF THEY ARE NOT CERTIFIED FOR USE ON THIS LIFT, THEN THE CERTIFICATION OF THIS LIFT SHALL BECOME NULL AND VOID. CONTACT THE PARTICIPANT FOR INFORMATION PERTAINING TO CERTIFIED ATTACHMENTS, ACCESSORIES OR CONFIGURATION MODIFYING COMPONENTS.

BENDPAK LIFTS ARE SUPPLIED WITH CONCRETE FASTENERS MEETING THE CRITERIA AS PRESCRIBED BY ASTM E488 - 96(2003). LIFT BUYERS ARE RESPONSIBLE FOR ANY SPECIAL REGIONAL, STRUCTURAL AND/OR SEISMIC ANCHORING REQUIREMENTS SPECIFIED BY ANY OTHER AGENCIES AND/OR CODES SUCH AS THE UNIFORM BUILDING CODE (UBC) AND/OR INTERNATIONAL BUILDING CODE (IBC).

THE MANUFACTURE, USE, SALE OR IMPORT OF THIS PRODUCT MAY BE SUBJECT TO ONE OR MORE UNITED STATES PATENTS, OR PENDING APPLICATIONS, OWNED BY BENDPAK, INC.

DO NOT REMOVE — ENGINEERED BY BENDPAK INC. USA — MADE IN CHINA

E

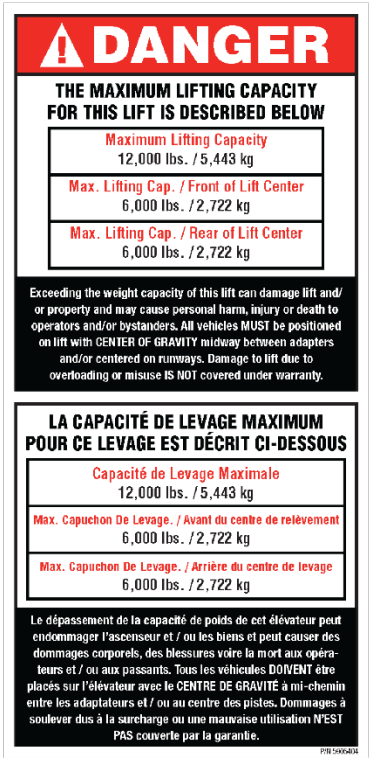

DANGER

THE MAXIMUM LIFTING CAPACITY FOR THIS LIFT IS DESCRIBED BELOW

Maximum Lifting Capacity 12,000 lbs. / 5,443 kg
Max. Lifting Cap. / Front of Lift Center 6,000 lbs. / 2,722 kg
Max. Lifting Cap. / Rear of Lift Center 6,000 lbs. / 2,722 kg

Exceeding the weight capacity of this lift can damage lift and/ or property and may cause personal harm, injury or death to operators and/or bystanders. All vehicles MUST be positioned on lift with CENTER OF GRAVITY midway between adapters and/or centered on runways. Damage to lift due to overloading or misuse IS NOT covered under warranty.

LA CAPACITÉ DE LEVAGE MAXIMUM POUR CE LEVAGE EST DÉCRIT CI-DESSOUS

Capacité de Levage Maximale 12,000 lbs. / 5,443 kg
Max. Capuchon De Levage. / Avant du centre de relèvement 6,000 lbs. / 2,722 kg
Max. Capuchon De Levage. / Arrière du centre de levage 6,000 lbs. / 2,722 kg

Le dépassement de la capacité de poids de cet élévateur peut endommager l'ascenseur et / ou les biens et peut causer des dommages corporels, des blessures voire la mort aux opérateurs et / ou aux passants. Tous les véhicules DOIVENT être placés sur l'élévateur avec le CENTRE DE GRAVITÉ à mi-chemin entre les adaptateurs et / ou au centre des pistes. Dommages à soulever dus à la surcharge ou une mauvaise utilisation N'EST PAS couverte par la garantie.

P/N 5905404

G

NOTICE
Read operating and safety manuals before using lift.
NOTICE
Proper maintenance and inspection is necessary for safe operation.
NOTICE
Do not operate a damaged lift.
The messages and pictographs shown are generic in nature and are meant to generally represent hazards common to all automotive lifts regardless of specific style.
Funding for the development and validation of these labels was provided by the Automotive Lift Institute, PO Box 85 Cortland, NY 13045.
Replacement label sets may be obtained from the original lift manufacturer and ALI's member companies. They are protected by copyright.
www.autolift.org
© 2012 by ALI, Inc.
ALI/WL200s

CAUTION
Lift to be used by trained operator ONLY.
CAUTION
Authorized personnel only in lift area.
The messages and pictographs shown are generic in nature and are meant to generally represent hazards common to all automotive lifts regardless of specific style.
Funding for the development and validation of these labels was provided by the Automotive Lift Institute, PO Box 85 Cortland, NY 13045.
Replacement label sets may be obtained from the original lift manufacturer and ALI's member companies. They are protected by copyright.
www.autolift.org
© 2012 by ALI, Inc.
ALI/WL200o

WARNING
Clear area if vehicle is in danger of falling.
WARNING
Remain clear of lift when raising or lowering vehicle.
WARNING
Keep clear of pinch points when lift is moving.
WARNING
Keep feet clear of lift while lowering.
WARNING
Do not overide self-closing lift controls.
WARNING
Chock wheel to prevent vehicle movement.
The messages and pictographs shown are generic in nature and are meant to generally represent hazards common to all automotive lifts regardless of specific style.
Funding for the development and validation of these labels was provided by the Automotive Lift Institute, PO Box 85 Cortland, NY 13045.
Replacement label sets may be obtained from the original lift manufacturer and ALI's member companies. They are protected by copyright.
www.autolift.org
© 2012 by ALI, Inc.
ALI/WL200w

F

ATTENTION
MAXIMUM LIFTING CAPACITY
CAPACITÉ DE LEVAGE MAXIMUM
12000 Lbs.
5443 Kg.
P/N 5906660

H

NOTICE
If attachments, accessories, or configuration modifying components used on this lift are located in the load path and affect operation of the lift, affect the lift electrical listing, or affect intended vehicle accommodation; and if they are not certified for use on this lift, then the certification of this lift shall become null and void. Contact the participant for information pertaining to certified attachments, accessories, or configuration modifying components.
www.autolift.org
©2011 by ALI, Inc.
ALI / WLSIA01

J

WARNING
SLIPPERY WHEN WET OR ICY
Use caution when driving onto wet or icy drive-up ramps and platforms. DO NOT walk on lift surfaces that are wet or icy.
AVERTISSMENT
GLISSANT LORSQU'IL EST MOUILLÉ OU GLACÉ
Soyez prudent lorsque vous conduisez sur des rampes d'accès mouillées ou verglacées et les plateformes. NE PAS marcher sur des surfaces de levage humides ou glacées.
PN 5905138

K

AMERICAN OWNED
EST.
1965
50+ YEARS
BENDPAK INC.

L

CALIFORNIA PROPOSITION 65
WARNING
WARNING! This product can expose you to chemicals including styrene and vinyl chloride which are on the list of over 900 chemicals identified by the State of California to cause cancer, birth defects or reproductive harm. ALWAYS use this product in accordance with the manufacturer's instructions.
For more information, go to www.p65warnings.ca.gov.
PN 5905775

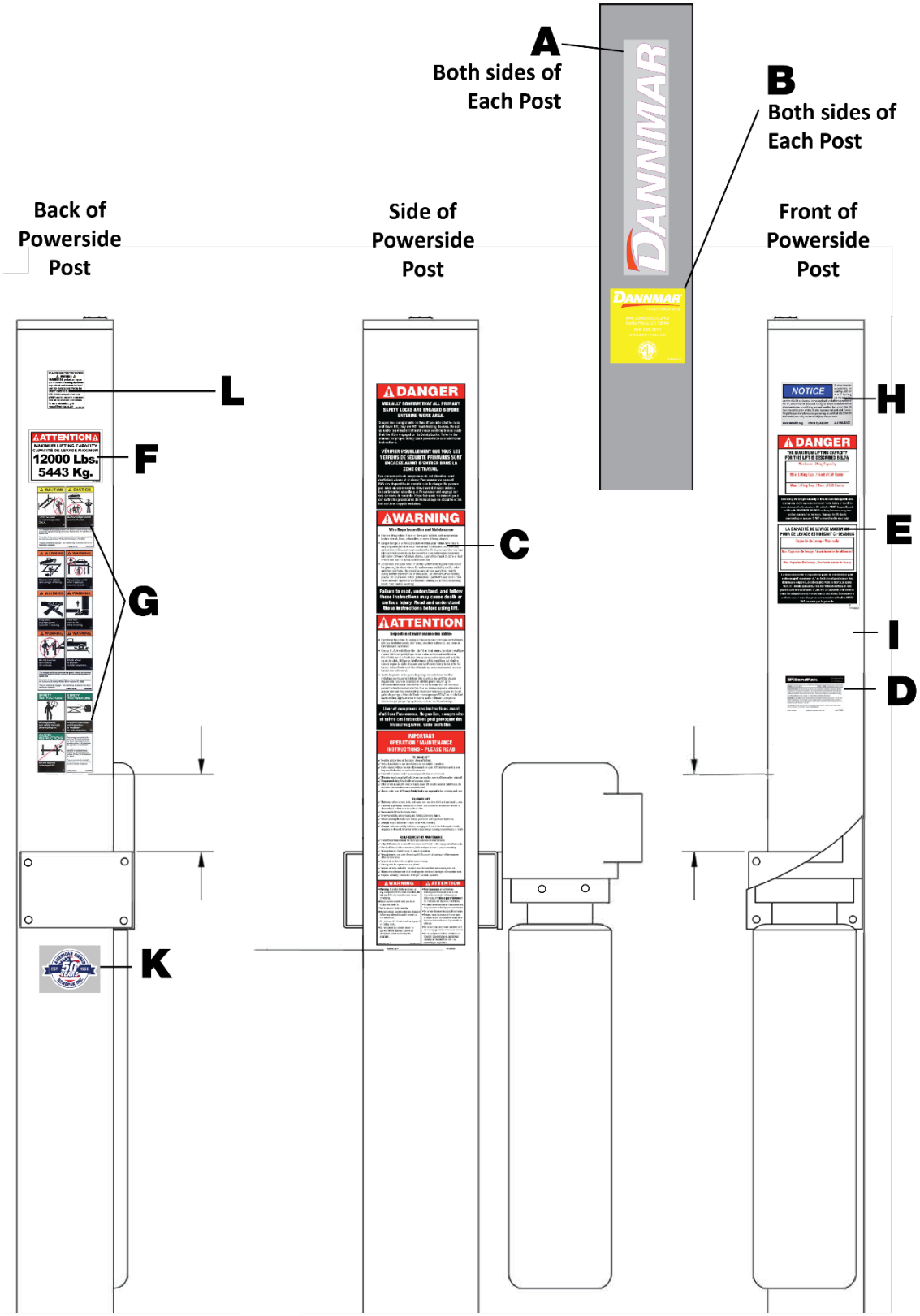
A
Both sides of Each Post
B
Both sides of Each Post
Back of Powerside Post
Side of Powerside Post
Front of Powerside Post
L
F
G
K
C
H
E
I
D
DANNMAR
ATTENTION
12000 Lbs.
5443 Kg.
DANGER
WARNING
ATTENTION
NOTICE
DANGER

Parts Drawings

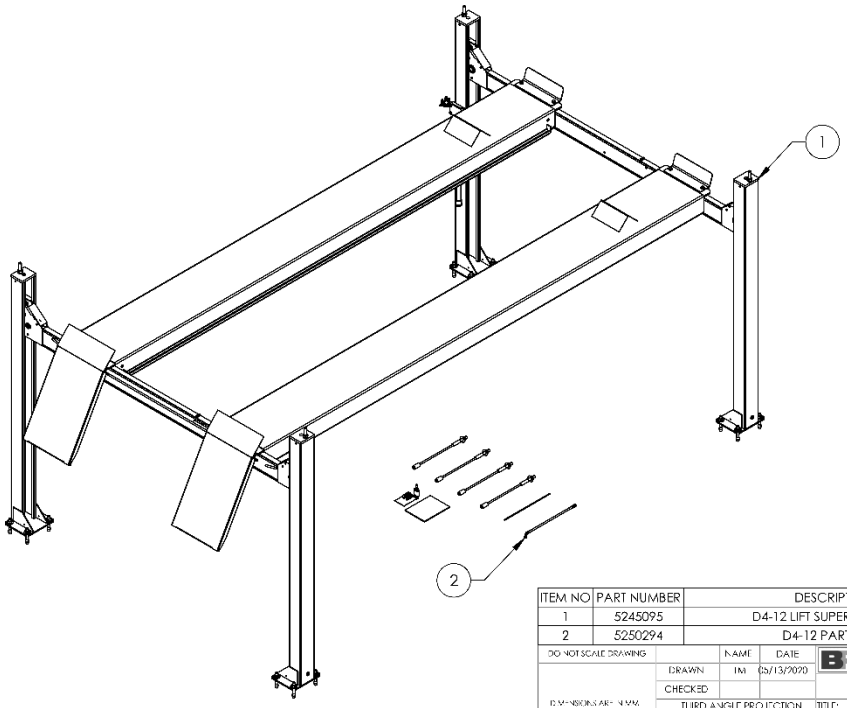

ITEM NO	PART NUMBER	DESCRIPTION	QTY	REV
1	5245095	D4-12 LIFT SUPERSTRUCTURE	1	B
2	5250294	D4-12 PARTS BOX	1	C

DO NOT SCALE DRAWING		NAME	DATE	BendPak 1645 LEMONWOOD DR. SANTA PAULA, CA 93060
	DRAWN	IM	05/13/2020	
	CHECKED			
DIMENSIONS ARE IN MM.	THIRD ANGLE PROJECTION			TITLE: D4-12 PRODUCTION LIFT
	PROPRIETARY AND CONFIDENTIAL THE INFORMATION CONTAINED IN THIS DRAWING IS THE SOLE PROPERTY OF BENDPAK INC. ANY REPRODUCTION IN PART OR AS A WHOLE WITHOUT THE WRITTEN PERMISSION OF BENDPAK INC. IS PROHIBITED.			SIZE A DWG. NO. 5260615 REV F
				SCALE: 1:35 SHEET 1 OF 3

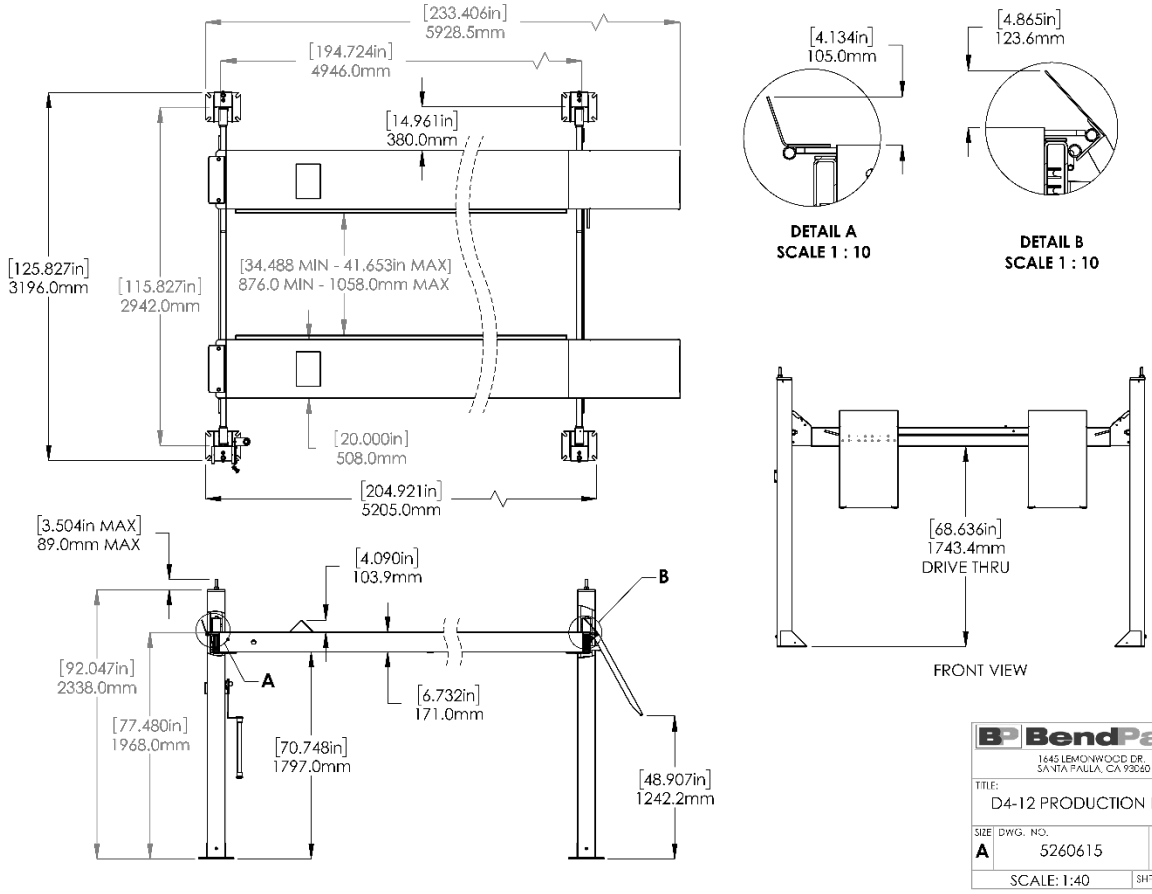

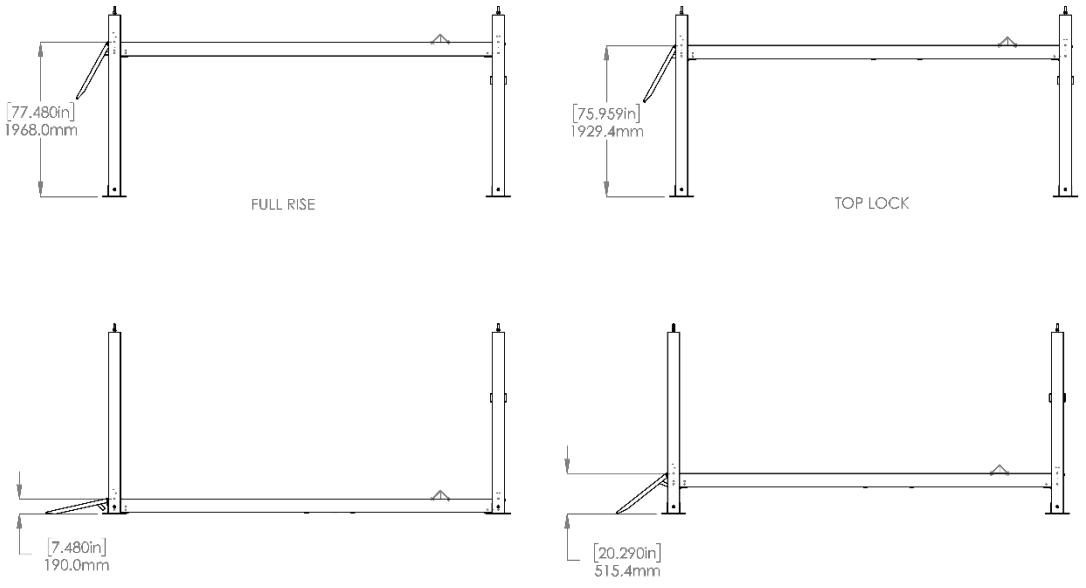

BendPak
1645 LEMONWOOD DR.
SANTA PAULA, CA 93060

TITLE: D4-12 PRODUCTION LIFT

SIZE	DWG. NO.	REV
A	5260615	F
SCALE: 1:55		SHEET 3 OF 3

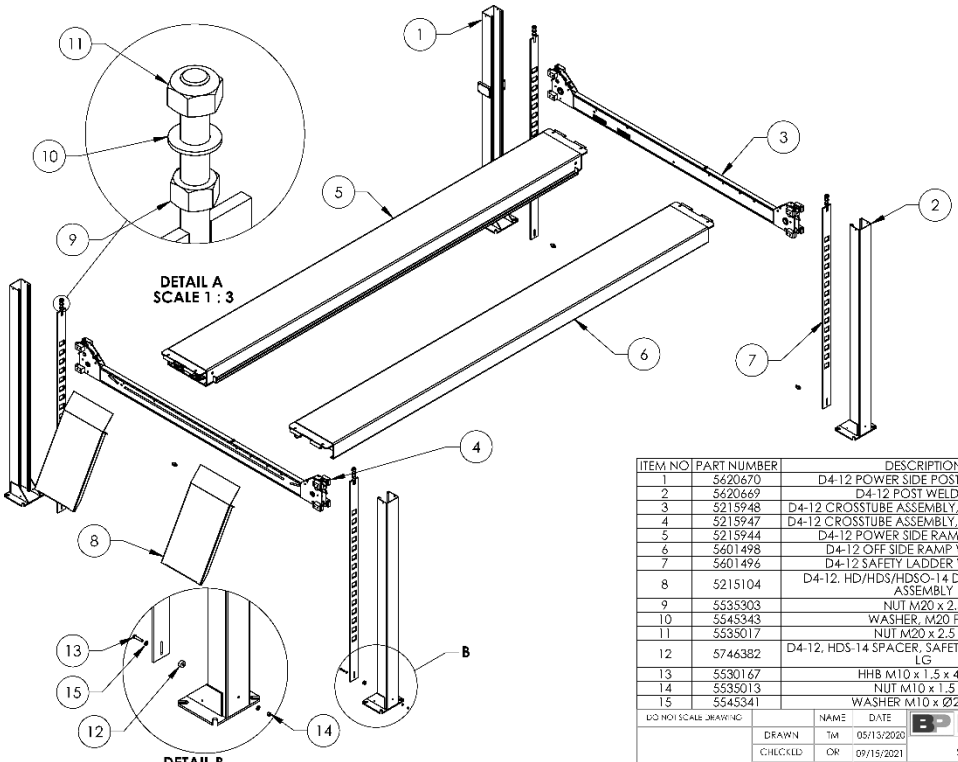

ITEM NO	PART NUMBER	DESCRIPTION	QTY	REV
1	5620670	D4-12 POWER SIDE POST WELDMENT	1	A
2	5620669	D4-12 POST WELDMENT	3	A
3	5215948	D4-12 CROSSTUBE ASSEMBLY, SMALL WINDOW	1	B
4	5215947	D4-12 CROSSTUBE ASSEMBLY, LARGE WINDOW	1	B
5	5215944	D4-12 POWER SIDE RAMP ASSEMBLY	1	C
6	5601498	D4-12 OFF SIDE RAMP WELDMENT	1	A
7	5601496	D4-12 SAFETY LADDER WELDMENT	4	A
8	5215104	D4-12, HD/HDS/HDSO-14 DRIVE UP RAMP ASSEMBLY	2	H
9	5535303	NUT M20 x 2.5	4	-
10	5545343	WASHER, M20 FLAT	4	-
11	5535017	NUT M20 x 2.5 NL	4	-
12	5746382	D4-12, HDS-14 SPACER, SAFETY LADDER, 15mm LG	4	A
13	5530167	HHB M10 x 1.5 x 45mm	4	-
14	5535013	NUT M10 x 1.5 NL	4	-
15	5545341	WASHER M10 x Ø20 FLAT	8	-

DO NOT SCALE DRAWING

	NAME	DATE
DRAWN	TM	05/13/2020
CHECKED	OR	09/15/2021

DIMENSIONS ARE IN MM

THIRD ANGLE PROJECTION

PROPRIETARY AND CONFIDENTIAL
THE INFORMATION CONTAINED IN THIS DRAWING IS THE SOLE PROPERTY OF BENDPAK INC. ANY REPRODUCTION IN WHOLE OR IN PART WITHOUT WRITTEN PERMISSION OF BENDPAK INC. IS PROHIBITED.

BendPak
1645 LEMONWOOD DR.
SANTA PAULA, CA 93060

TITLE: D4-12 LIFT SUPERSTRUCTURE

SIZE	DWG. NO.	REV
A	5245095	B
SCALE: 1:40		SHEET 1 OF 1

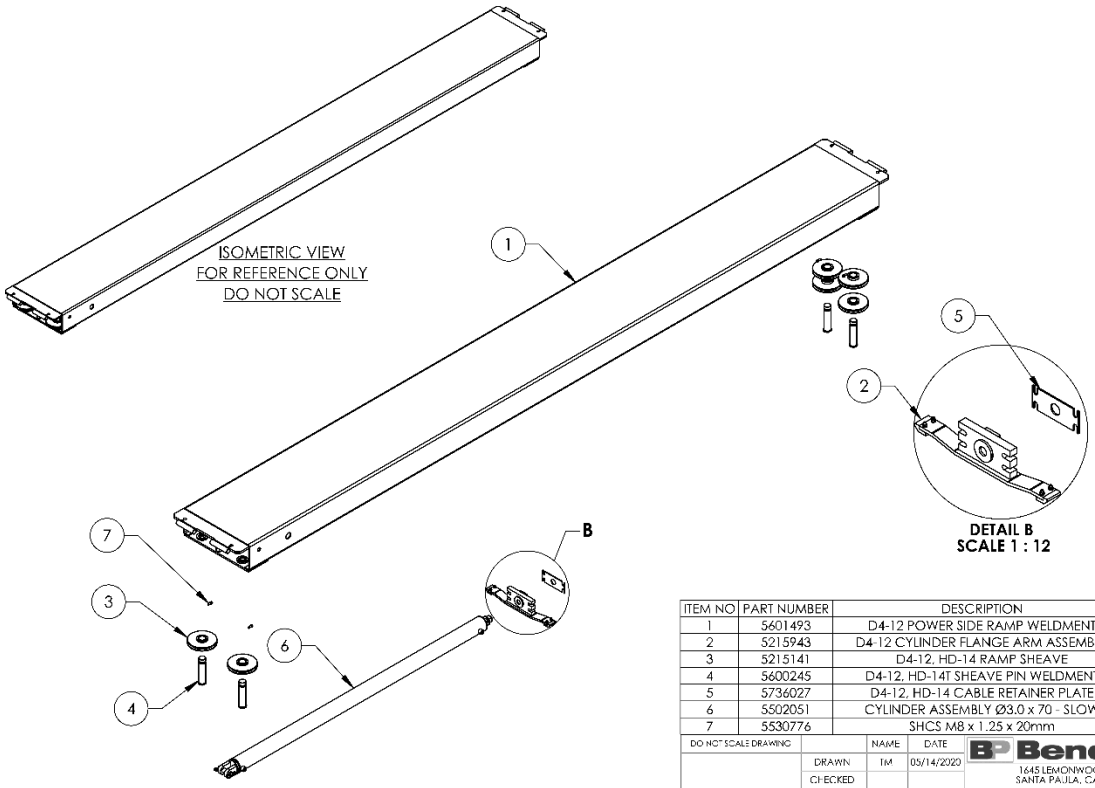

ITEM NO	PART NUMBER	DESCRIPTION	QTY	REV
1	5601493	D4-12 POWER SIDE RAMP WELDMENT	1	A
2	5215943	D4-12 CYLINDER FLANGE ARM ASSEMBLY	1	A
3	5215141	D4-12, HD-14 RAMP SHEAVE	6	C
4	5600245	D4-12, HD-14T SHEAVE PIN WELDMENT	4	B
5	5736027	D4-12, HD-14 CABLE RETAINER PLATE	1	D
6	5502051	CYLINDER ASSEMBLY Ø3.0 x 70 - SLOW	1	A
7	5530776	SHCS M8 x 1.25 x 20mm	4	-

DO NOT SCALE DRAWING

	NAME	DATE
DRAWN	TM	05/14/2020
CHECKED		

DIMENSIONS ARE IN MM

THIRD ANGLE PROJECTION

PROPRIETARY AND CONFIDENTIAL
THE INFORMATION CONTAINED IN THIS DRAWING IS THE SOLE PROPERTY OF BENDPAK INC. ANY REPRODUCTION IN PART OR AS A WHOLE WITHOUT THE WRITTEN PERMISSION OF BENDPAK INC IS PROHIBITED.

BendPak
1645 LEMONWOOD DR.
SANTA PAULA, CA 93060

TITLE: D4-12 POWER SIDE RAMP ASSEMBLY

SIZE A | DWG. NO. 5215944 | REV C

SCALE: 1:25 | SHEET 1 OF 2

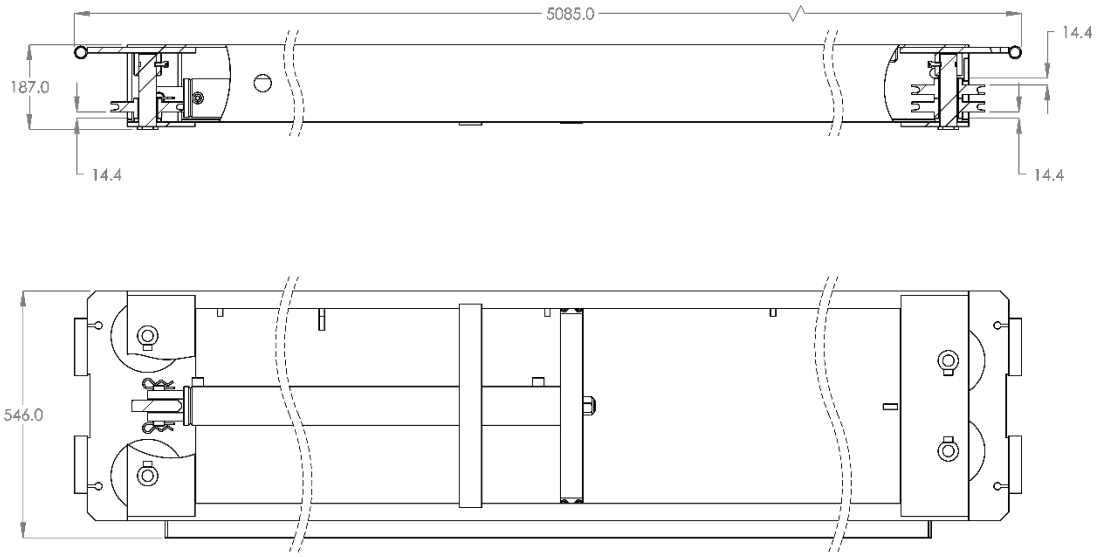

BendPak
1645 LEMONWOOD DR.
SANTA PAULA, CA 93060

TITLE: D4-12 POWER SIDE RAMP ASSEMBLY

SIZE A | DWG. NO. 5215944 | REV C

SCALE: 1:10 | SHEET 2 OF 2

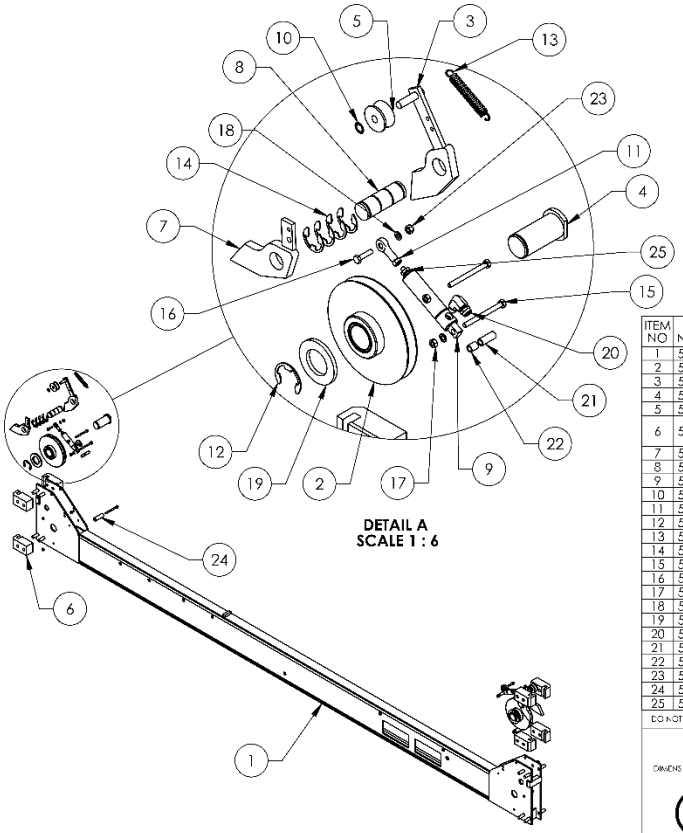

ITEM NO	PART NUMBER	DESCRIPTION	QTY	REV
1	5601491	D4-12 CROSSTUBE WELDMENT, LARGE WINDOW	1	A
2	5215142	D4-12, HD-14T CROSSTUBE SHEAVE ASSEMBLY	2	C
3	5600044	4 POST LIGHT DUTY SERIES SLACK SAFETY WELDMENT	2	F
4	5600173	D4-12, HD/HDS/HDSO-14 SHEAVE PIN WELDMENT	2	G
5	5575380	D4-12, HD/HDS/HDSO-14 SAFETY ROLLER	2	C
6	5716005	D4-12, HD-7/7500/9/14/HDSO-14 POLYETHYLENE SLIDE BLOCK	8	M
7	5600760	D4, HD/HDS LIGHT DUTY SERIES SAFETY WELDMENT	2	C
8	5746008	D4-12, HD/HDS-7/7500/9/14, HDSO-14 SAFETY PIN	2	D
9	5502195	AIR CYLINDER, Ø19mm x 25 STROKE	2	--
10	5505030	ROTOR CLIP 10mm SS	2	--
11	5505625	FEMALE ROD END M6 x 33mm	2	--
12	5540002	E RING Ø1.375" OD TRUARC X5133-137	2	--
13	5540065	SPRING Ø13mm x 90mm, SLACK SAFETY	2	A
14	5540275	E RING Ø25mm OD DIN 6799 0250	8	--
15	5530005	HHB M6 x 1 x 70	6	--
16	5530756	HHB M6 x 1.0 x 25mm	2	--
17	5535112	NUT M6 x 1.0	4	--
18	5545005	WASHER, M6 x 12mm FLAT	4	--
19	5545032	WASHER M36 x 66 FLAT	2	--
20	5550087	FTG ELB -04 COMP x -02 NPT	2	--
21	5755137	D4-12, HD AIR CYLINDER SPACER 25mm	2	A
22	5755136	D4-12, HD AIR CYLINDER SPACER 12mm	2	A
23	5535357	NUT M6 x 1.0 NL	4	--
24	5755157	D4-12, HD-7/7500/9 CROSSTUBE SPACER Ø16 x Ø10 x 50	2	A
25	5535230	NUT 1/4-28 JN	2	--

DO NOT SCALE DRAWING

	NAME	DATE
DRAWN	TM	05/14/2020
CHECKED	OR	09/15/2021

DIMENSIONS ARE IN MM

THIRD ANGLE PROJECTION

PROPRIETARY AND CONFIDENTIAL

BendPak.
16645 DIMONWOOD DR.
SANTA PAULA, CA 93060

TITLE: D4-12 CROSSTUBE ASSEMBLY, LARGE WINDOW

SIZE: A | DWG. NO.: 5215947 | REV: B

SCALE: 1:20 | SHEET 1 OF 1

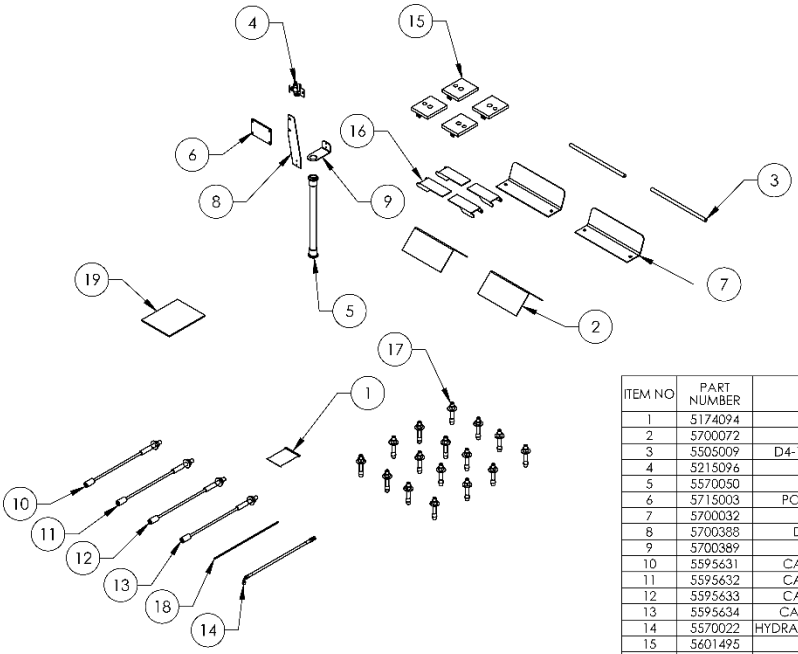

ITEM NO	PART NUMBER	DESCRIPTION	QTY	REV
1	5174094	D4-12, HD/HDS-14 PARTS BAG	1	G
2	5700072	WHEEL CHOCK	2	B
3	5505009	D4-12, HD/HDS-14 DRIVE UP RAMP PIN	2	D
4	5215096	PUSH BUTTON AIR ASSEMBLY	1	G
5	5570050	FLEX TUBE ASSEMBLY 1320mm	1	B
6	5715003	POWER UNIT VIBRATION DAMPENER	1	B
7	5700032	TIRE STOP	2	D
8	5700388	D4-12 FLEX TUBE BRACKET PLATE	1	A
9	5700389	D4-12 FLEX TUBE ANGLE	1	A
10	5595631	CABLE ASSEMBLY Ø12 x 4055mm ST	1	B
11	5595632	CABLE ASSEMBLY Ø12 x 5660mm ST	1	B
12	5595633	CABLE ASSEMBLY Ø12 x 8980mm ST	1	B
13	5595634	CABLE ASSEMBLY Ø12 x 10580mm ST	1	B
14	5570022	HYDRAULIC HOSE ASSEMBLY Ø6.4 x 3380mm	1	G
15	5601495	D4-12 TOP PLATE WELDMENT	4	A
16	5716058	D4-12 CROSSTUBE COVER, PLASTIC	4	A
17	5530456	AB 3/4" x 4 - 3/4"	16	-
18	5570795	1/4" POLY-FLO TUBING	20000mm*	-
19	5900246	D4-12 INSTALLATION MANUAL	1	-

DO NOT SCALE DRAWING

	NAME	DATE
DRAWN	TM	05/15/2020
CHECKED	OR	09/15/2021

DIMENSIONS ARE IN MM

THIRD ANGLE PROJECTION

PROPRIETARY AND CONFIDENTIAL

BendPak.
16645 DIMONWOOD DR.
SANTA PAULA, CA 93060

TITLE: D4-12 PARTS BOX

SIZE: A | DWG. NO.: 5250294 | REV: C

SCALE: 1:25 | SHEET 1 OF 1

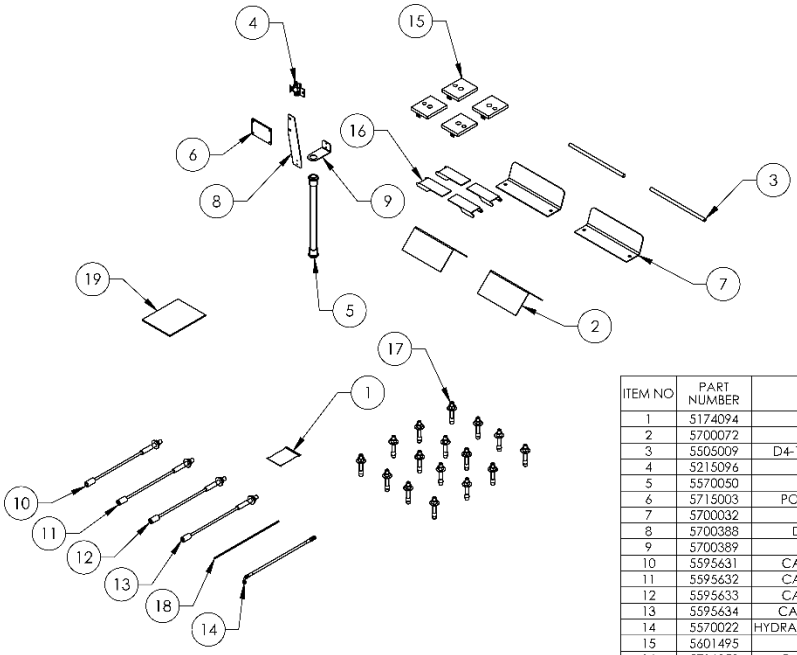

ITEM NO	PART NUMBER	DESCRIPTION	QTY	REV
1	5174094	D4-12, HD/HDS-14 PARTS BAG	1	G
2	5700072	WHEEL CHOCK	2	B
3	5505009	D4-12, HD/HDS-14 DRIVE UP RAMP PIN	2	D
4	5215096	PUSH BUTTON AIR ASSEMBLY	1	G
5	5570050	FLEX TUBE ASSEMBLY 1320mm	1	B
6	5715003	POWER UNIT VIBRATION DAMPENER	1	B
7	5700032	TIRE STOP	2	D
8	5700388	D4-12 FLEX TUBE BRACKET PLATE	1	A
9	5700389	D4-12 FLEX TUBE ANGLE	1	A
10	5595631	CABLE ASSEMBLY Ø12 x 4055mm ST	1	B
11	5595632	CABLE ASSEMBLY Ø12 x 5660mm ST	1	B
12	5595633	CABLE ASSEMBLY Ø12 x 8980mm ST	1	B
13	5595634	CABLE ASSEMBLY Ø12 x 10580mm ST	1	B
14	5570022	HYDRAULIC HOSE ASSEMBLY Ø6.4 x 3380mm	1	G
15	5601495	D4-12 TOP PLATE WELDMENT	4	A
16	5716058	D4-12 CROSSTUBE COVER, PLASTIC	4	A
17	5530456	AB 3/4" x 4 - 3/4"	16	-
18	5570795	1/4" POLY-FLO TUBING	20000mm*	-
19	5900246	D4-12 INSTALLATION MANUAL	1	-

DO NOT SCALE DRAWING

	NAME	DATE
DRAWN	TM	05/15/2020
CHECKED	OR	09/15/2021

BendPak
1645 LEMONWOOD DR.
SANTA PAULA, CA 93060

DIMENSIONS ARE IN MM

THIRD ANGLE PROJECTION

TITLE: D4-12 PARTS BOX

SIZE A | DWG. NO. 5250294 | REV C

SCALE: 1:25 | SHEET 1 OF 1

PROPRIETARY AND CONFIDENTIAL
THE INFORMATION CONTAINED IN THIS DRAWING IS THE SOLE PROPERTY OF BENDPAK INC. ANY REPRODUCTION IN PART OR AS A WHOLE WITHOUT THE WRITTEN PERMISSION OF BENDPAK INC. IS PROHIBITED.

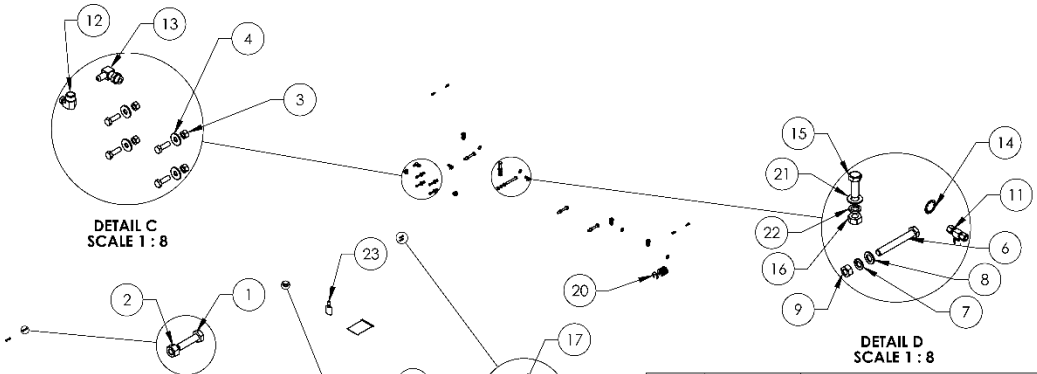

ITEM NO	PART NUMBER	DESCRIPTION	QTY	REV
1	5530756	HHB M6 x 1.0 x 25mm	8	-
2	5535357	NUT M6 x 1.0 NL	8	-
3	5535001	NUT M8 x 1.25 NL	4	-
4	5545340	WASHER M8 x24 FLAT	4	-
5	5530010	HHB M8 x 1.25 x 25	4	-
6	5530009	HHB M12 x 1.75 x 90 CL8.8	8	-
7	5545201	WASHER, M12 SPRING LOCK	8	-
8	5545347	WASHER, M12 FLAT WASHER	8	-
9	5535354	NUT, M12 x1.75	8	-
10	5550106	FTG ELB -04JIC x 3/8" NPT	1	-
11	5550395	FTG TEE -04 COMP x -04 COMP x -04 COMP	3	-
12	5550089	FTG ELB -04 COMP x -06 NPT	2	-
13	5550008	FTG ELB -04 JIC -06L ORB	1	-
14	5505032	ROTOR CLIP 18mm SS	4	-
15	5530107	HHB M14 x 2.0 x 40	4	-
16	5535107	NUT M14 x 2.0	4	-
17	5545009	WASHER, Ø4.3 x Ø9mm x 0.8mm	2	
18	5530008	SHCS M4 x 0.7 x 12 BOC	2	-
19	5535010	NUT M4 X 0.7 NL	2	-
20	5545535	C WASHER SHIM FOR LIFTS	20	-
21	5545010	WASHER M14 x 28 FLAT	4	-
22	5545349	WASHER M14 x 22 SL	4	-
23	5580012	LIQUID PTFE THREAD SEALANT 50ml	1	-

DO NOT SCALE DRAWING

	NAME	DATE
DRAWN	AC	08/08/2008
CHECKED	OR	09/12/2021

BendPak
1645 LEMONWOOD DR.
SANTA PAULA, CA 93060

DIMENSIONS ARE IN MM

THIRD ANGLE PROJECTION

TITLE: D4-12, HD/HDS-14 PARTS BAG

SIZE A | DWG. NO. 5174094 | REV G

SCALE: 1:30 | SHEET 1 OF 1

PROPRIETARY AND CONFIDENTIAL
THE INFORMATION CONTAINED IN THIS DRAWING IS THE SOLE PROPERTY OF BENDPAK INC. ANY REPRODUCTION IN PART OR AS A WHOLE WITHOUT THE WRITTEN PERMISSION OF BENDPAK INC. IS PROHIBITED.

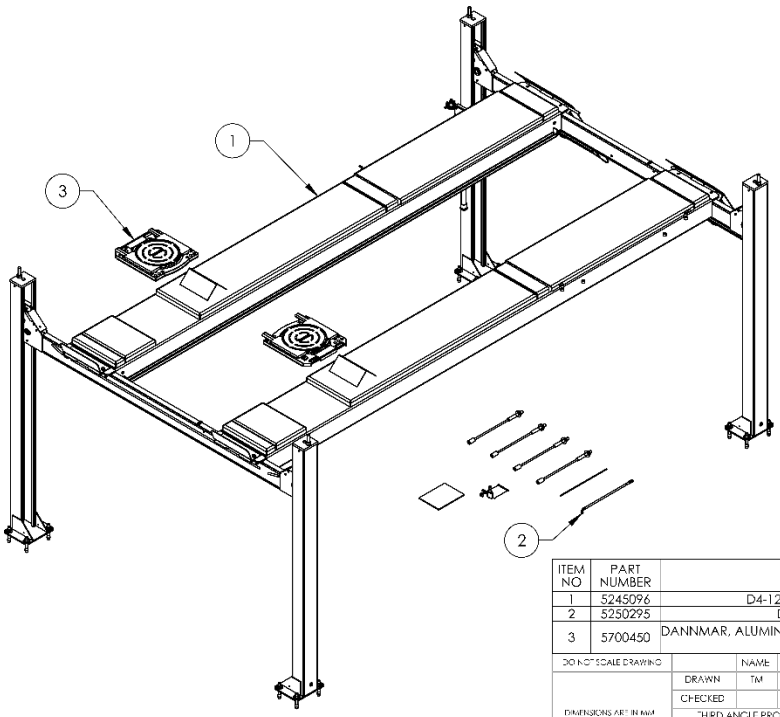

ITEM NO	PART NUMBER	DESCRIPTION	QTY	REV
1	5245096	D4-12A LIFT SUPERSTRUCTURE	1	D
2	5250295	D4-12A PARTS BOX	1	D
3	5700450	DANNMAR, ALUMINUM DELUXE ALIGNMENT TURNPLATES, SET OF TWO	1	-

DO NOT SCALE DRAWING

	NAME	DATE
DRAWN	TM	05/15/2020
CHECKED		

BendPak
1645 LEMONWOOD DR.
SANTA PAULA, CA 93060

DIMENSIONS ARE IN MM

THIRD ANGLE PROJECTION

PROPRIETARY AND CONFIDENTIAL
THIS DRAWING AND ALL INFORMATION CONTAINED HEREIN IS THE PROPERTY OF BENDPAK INC. AND IS TO BE KEPT CONFIDENTIAL. NO PART OF THIS DRAWING MAY BE REPRODUCED OR DISCLOSED TO ANY OTHER PERSON OR ORGANIZATION WITHOUT THE WRITTEN PERMISSION OF BENDPAK INC. IS PROHIBITED.

TITLE: D4-12A PRODUCTION LIFT

SIZE	DWG. NO.	REV
A	5260616	H

SCALE: 1:35 SHEET 1 OF 3

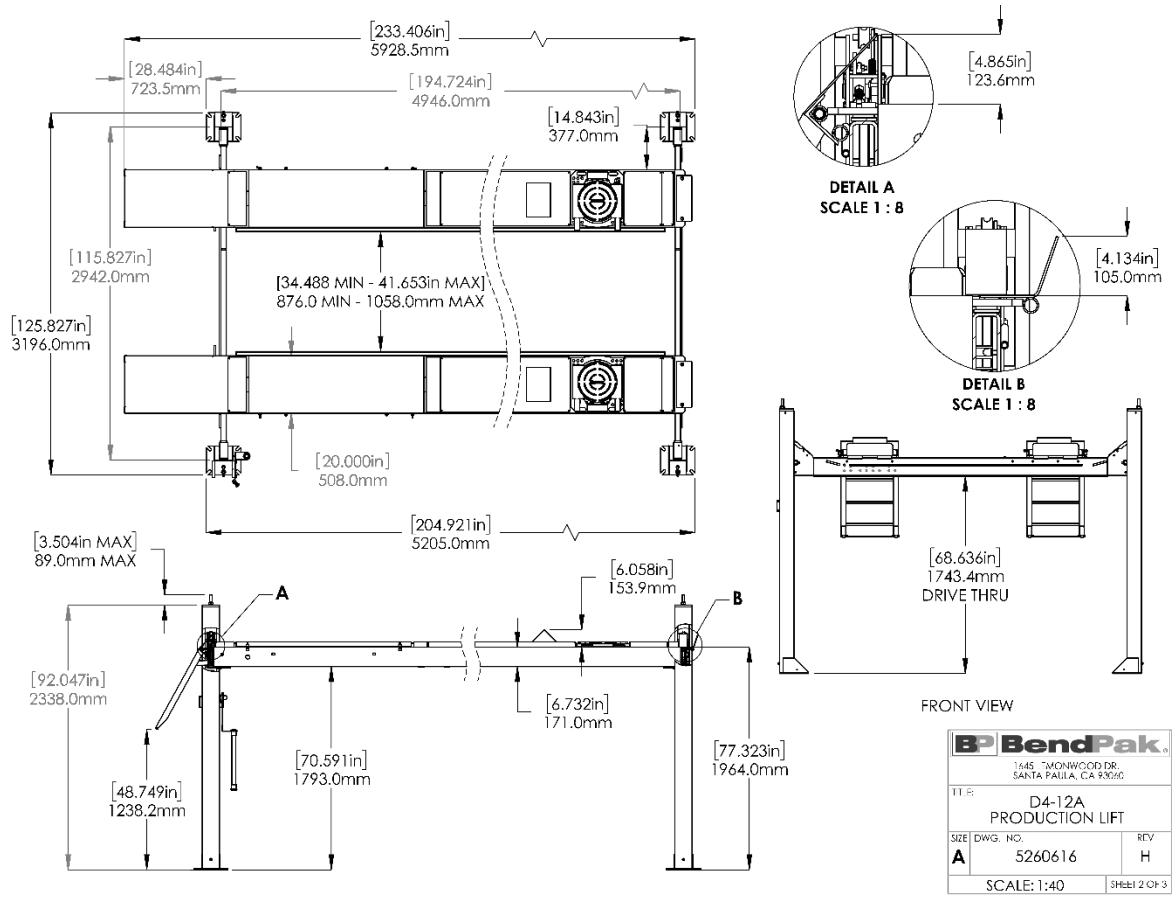

BendPak
1645 LEMONWOOD DR.
SANTA PAULA, CA 93060

TITLE: D4-12A PRODUCTION LIFT

SIZE	DWG. NO.	REV
A	5260616	H

SCALE: 1:40 SHEET 2 OF 3

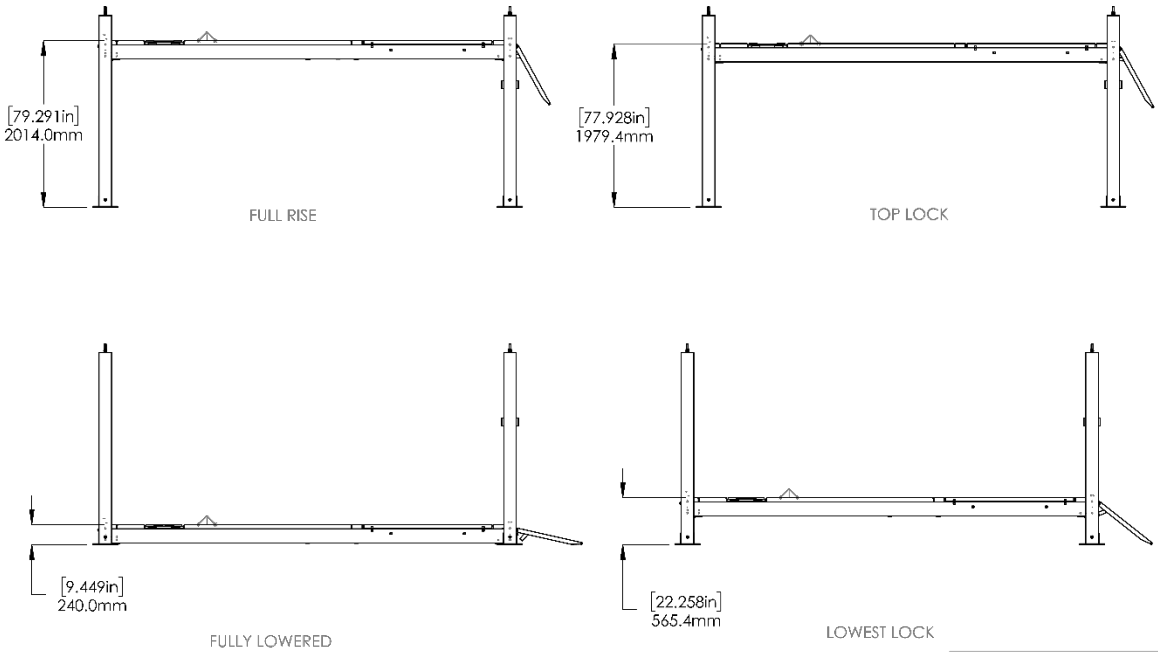

BendPak	1645 LEMONWOOD DR. SANTA PAULA, CA 93060
TITLE:	D4-12A PRODUCTION LIFT
SIZE A	DWG. NO. 5260616 — REV H
SCALE: 1:55	SHEET 3 OF 3

1. DIMENSIONS SHOWN ARE WITH THE LOCK LADDER ADJUSTED ALL THE WAY UP

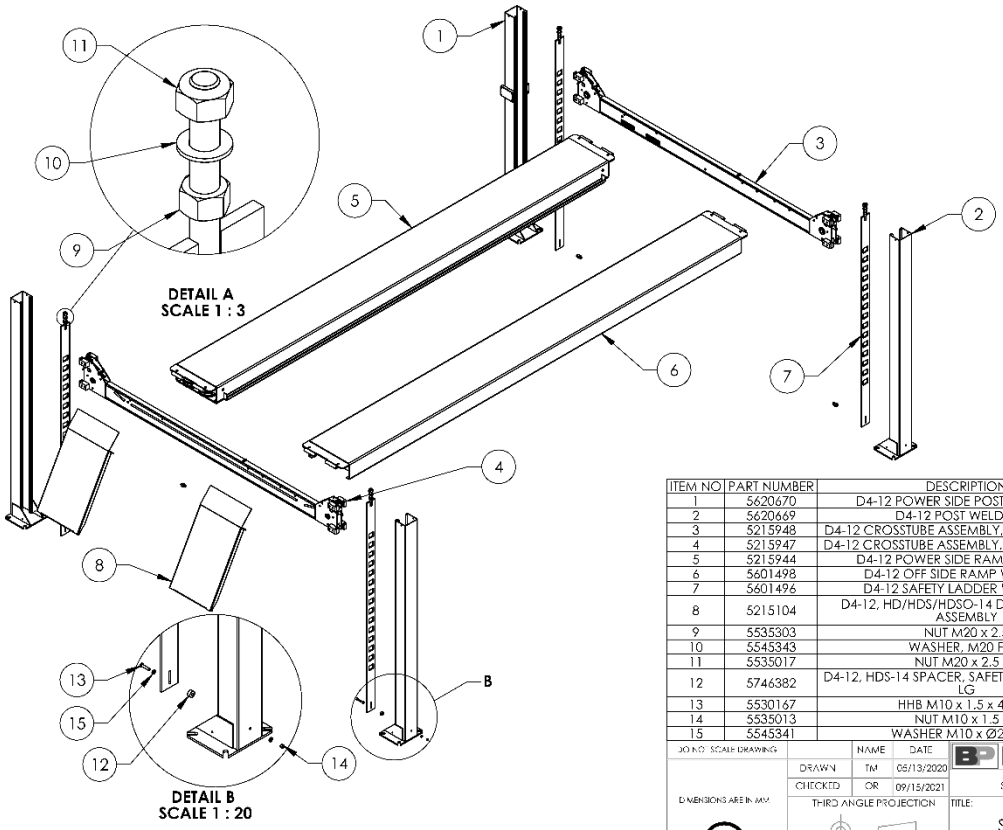

ITEM NO	PART NUMBER	DESCRIPTION	QTY	REV
1	5620670	D4-12 POWER SIDE POST WELDMENT	1	A
2	5620669	D4-12 POST WELDMENT	3	A
3	5215948	D4-12 CROSSTUBE ASSEMBLY, SMALL WINDOW	1	B
4	5215947	D4-12 CROSSTUBE ASSEMBLY, LARGE WINDOW	1	B
5	5215944	D4-12 POWER SIDE RAMP ASSEMBLY	1	C
6	5601498	D4-12 OFF SIDE RAMP WELDMENT	1	A
7	5601496	D4-12 SAFETY LADDER WELDMENT	4	A
8	5215104	D4-12, HD/HDS/HDSO-14 DRIVE UP RAMP ASSEMBLY	2	H
9	5535303	NUT M20 x 2.5	4	-
10	5545343	WASHER, M20 FLAT	4	-
11	5535017	NUT M20 x 2.5 NL	4	-
12	5746382	D4-12, HDS-14 SPACER, SAFETY LADDER, 15mm LG	4	A
13	5530167	HHB M10 x 1.5 x 45mm	4	-
14	5535013	NUT M10 x 1.5 NL	4	-
15	5545341	WASHER M10 x Ø20 FLAT	8	-

		NAME	DATE	
JOB NO. SCALE DRAWING	DRAWN	TM	05/13/2020	BendPak — 1645 LEMONWOOD DR. SANTA PAULA, CA 93060
	CHECKED	OR	09/15/2021	
DIMENSIONS ARE IN MM	THIRD ANGLE PROJECTION			TITLE: D4-12 LIFT SUPERSTRUCTURE
	PROPRIETARY AND CONFIDENTIAL THE INFORMATION CONTAINED IN THIS DRAWING IS THE SOLE PROPERTY OF BENDPAK INC. ANY REPRODUCTION IN PART OR AS A WHOLE WITHOUT THE WRITTEN PERMISSION OF BENDPAK INC. IS PROHIBITED.			SIZE A — DWG. NO. 5245095 — REV B
				SCALE: 1:40 — SHEET 1 OF 1

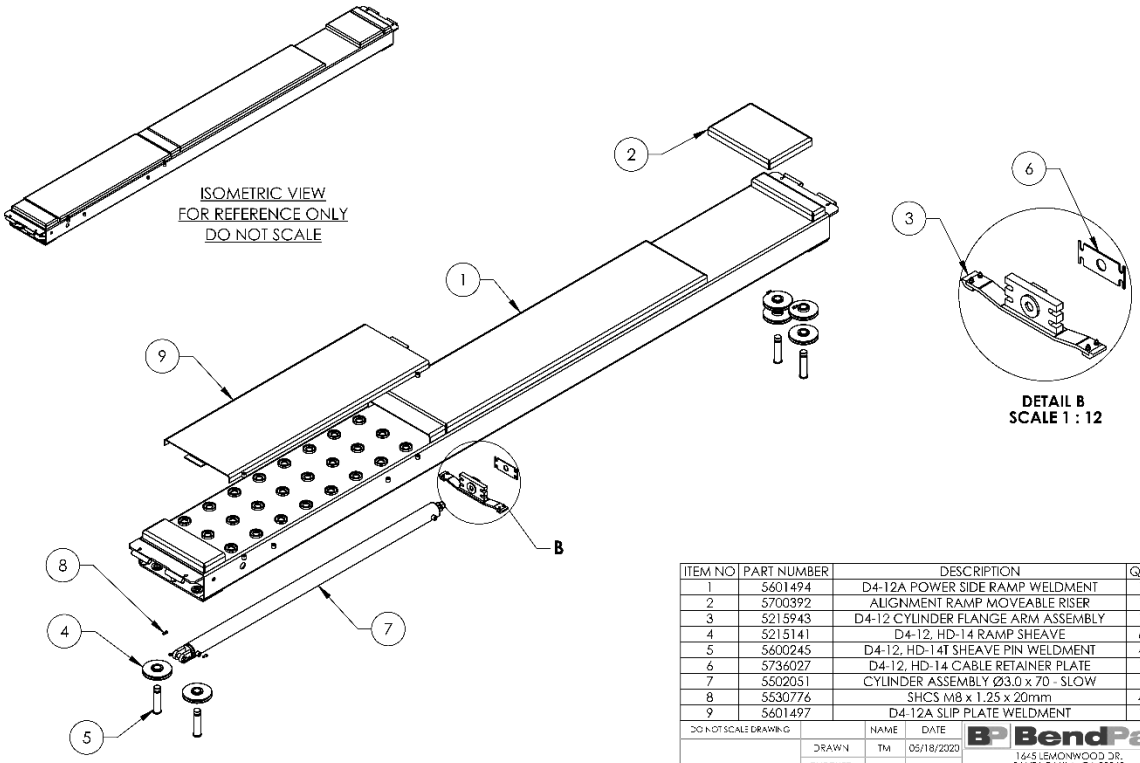

ITEM NO	PART NUMBER	DESCRIPTION	QTY	REV
1	5601494	D4-12A POWER SIDE RAMP WELDMENT	1	C
2	5700392	ALIGNMENT RAMP MOVEABLE RISER	1	B
3	5215943	D4-12 CYLINDER FLANGE ARM ASSEMBLY	1	A
4	5215141	D4-12, HD-14 RAMP SHEAVE	6	C
5	5600245	D4-12, HD-14T SHEAVE PIN WELDMENT	4	B
6	5736027	D4-12, HD-14 CABLE RETAINER PLATE	1	D
7	5502051	CYLINDER ASSEMBLY Ø3.0 x 70 - SLOW	1	A
8	5530776	SHCS M8 x 1.25 x 20mm	4	-
9	5601497	D4-12A SLIP PLATE WELDMENT	1	A

DO NOT SCALE DRAWING

	NAME	DATE
DRAWN	TM	05/18/2020
CHECKED		

DIMENSIONS ARE IN MM

THIRD ANGLE PROJECTION

BendPak
1645 LEMONWOOD DR.
SANTA PAULA, CA 93060

TITLE: D4-12A POWER SIDE RAMP ASSEMBLY

SIZE A | DWG. NO. 5215945 | REV D

SCALE: 1:25 | SHEET 1 OF 2

PROPRIETARY AND CONFIDENTIAL
THE INFORMATION CONTAINED IN THIS DRAWING IS THE SOLE PROPERTY OF BENDPAK INC. ANY REPRODUCTION IN PART OR AS A WHOLE WITHOUT THE WRITTEN PERMISSION OF BENDPAK INC. IS PROHIBITED.

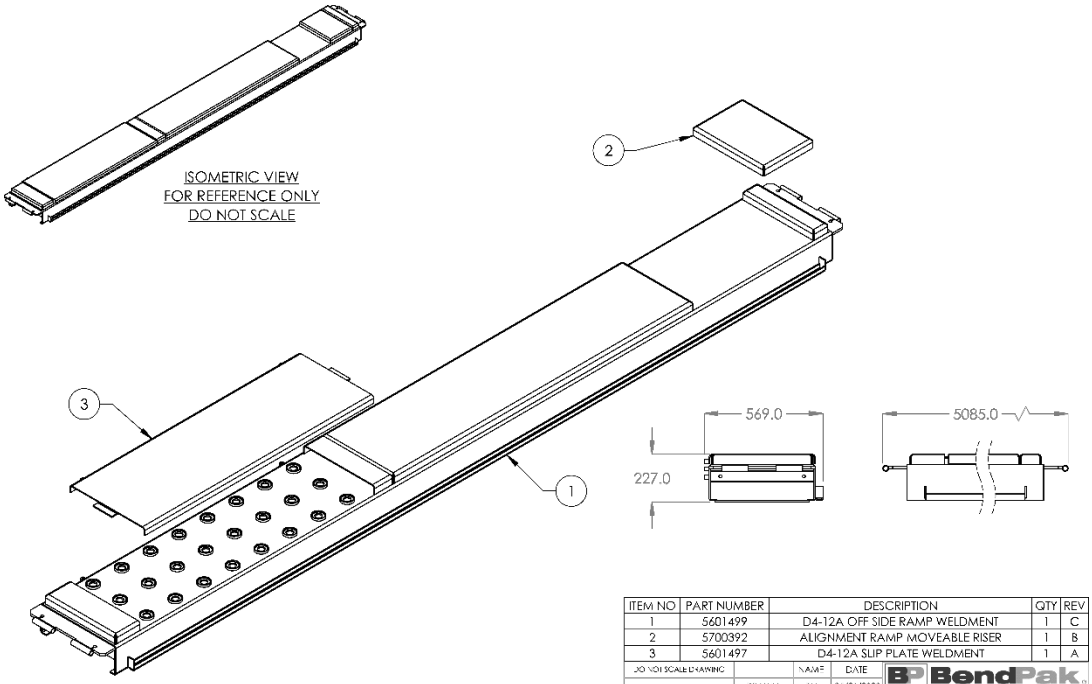

ITEM NO	PART NUMBER	DESCRIPTION	QTY	REV
1	5601499	D4-12A OFF SIDE RAMP WELDMENT	1	C
2	5700392	ALIGNMENT RAMP MOVEABLE RISER	1	B
3	5601497	D4-12A SLIP PLATE WELDMENT	1	A

DO NOT SCALE DRAWING

	NAME	DATE
DRAWN	TM	05/21/2020
CHECKED	OR	0 /26/2021

DIMENSIONS ARE IN MM

THIRD ANGLE PROJECTION

BendPak
1645 LEMONWOOD DR.
SANTA PAULA, CA 93060

TITLE: D4-12A OFF SIDE RAMP ASSEMBLY

SIZE A | DWG. NO. 5215946 | REV C

SCALE: 1:20 | SHEET 1 OF 1

PROPRIETARY AND CONFIDENTIAL
THE INFORMATION CONTAINED IN THIS DRAWING IS THE SOLE PROPERTY OF BENDPAK INC. ANY REPRODUCTION IN PART OR AS A WHOLE WITHOUT THE WRITTEN PERMISSION OF BENDPAK INC. IS PROHIBITED.

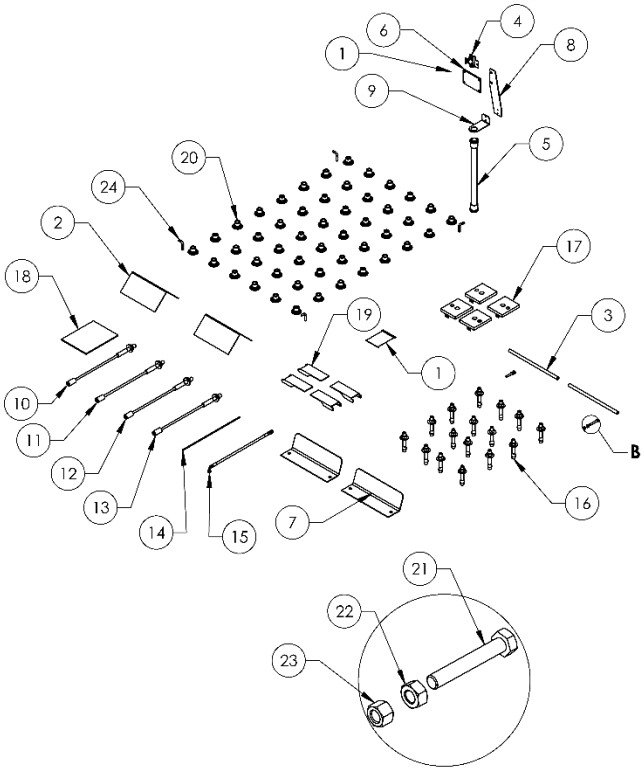

DETAIL B
SCALE 1 : 3

ITEM NO	PART NUMBER	DESCRIPTION	QTY	REV
1	5174094	D4-12, HD/HDS-14 PARTS BAG	1	G
2	5700072	WHEEL CHOCK	2	B
3	5505009	D4-12, HD/HDS-14 DRIVE UP RAMP PIN	2	D
4	5215096	PUSH BUTTON AIR ASSEMBLY	1	G
5	5570050	FLEX TUBE ASSEMBLY 1320mm	1	B
6	5715003	POWER UNIT VIBRATION DAMPENER	1	B
7	5700032	TIRE STOP	2	D
8	5700388	D4-12 FLEX TUBE BRACKET PLATE	1	A
9	5700389	D4-12 FLEX TUBE ANGLE	1	A
10	5595631	CABLE ASSEMBLY Ø12 x 4055mm ST	1	B
11	5595632	CABLE ASSEMBLY Ø12 x 5660mm ST	1	B
12	5595633	CABLE ASSEMBLY Ø12 x 8980mm ST	1	B
13	5595634	CABLE ASSEMBLY Ø12 x 10580mm ST	1	B
14	5570795	1/4" POLY-FLO TUBING	20000mm*	-
15	5570022	HYDRAULIC HOSE ASSEMBLY Ø6.4 x 3380mm	1	G
16	5530456	AB 3/4" x 4 - 3/4"	16	-
17	5601495	D4-12 TOP PLATE WELDMENT	4	A
18	5900246	D4-12 INSTALLATION MANUAL	1	-
19	5716058	D4-12 CROSSTUBE COVER, PLASTIC	4	A
20	5575375	38 mm ALIGNMENT PAD CASTER	48	-
21	5530046	HHB M10 x 1.5 x 65mm	2	-
22	5535998	NUT M10 x 1.5	2	-
23	5535013	NUT M10 x 1.5 NL	2	-
24	5745050	SLIP PLATE LOCK PIN	4	A

DO NOT SCALE DRAWING

	NAME	DATE
DRAWN	IM	05/21/2020
CHECKED	OR	09/15/2021

THIRD ANGLE PROJECTION

DIMENSIONS ARE IN MM

PROPRIETARY AND CONFIDENTIAL
THE INFORMATION CONTAINED IN THIS DRAWING IS THE SOLE PROPERTY OF BENDPAK INC. ANY REPRODUCTION IN PART OR WHOLE, WITHOUT THE WRITTEN PERMISSION OF BENDPAK INC. IS PROHIBITED.

BendPak.
1665 HAMILTON WOOD DR.,
SANTA PAULA, CA 93060

TITLE: D4-12A PARTS BOX

SIZE: A | DWG. NO. 5250295 | REV D

SCALE: 1:28 | SHEET 1 OF 1

Maintenance Log

1645 Lemonwood Drive
Santa Paula, CA, 93060 USA

© 2022 BendPak Inc. All rights reserved.