30440 Agoura Road
Agoura Hills, CA 91301 USA
Toll Free: (800) 253-2363
Telephone: (805) 933-9970
bendpak.com

AL9LC Two-Post Vehicle Lift

Installation and Operation Manual

Manual P/N 5900592—Revision A1 — November 2025

Models:

- AL9LC

Original Instructions in the English language.

⚠ DANGER

Important Safety Instructions, Save These Instructions! **Read the *entire* contents** of this manual ***before*** using this product. Failure to follow the instructions and safety precautions in this manual can result in serious injury or death. Make sure all other operators also read this manual. Keep the manual near the product for future reference. ***By proceeding with setup and operation, you agree that you fully understand the contents of this manual and assume full responsibility for product use***.

Manual. AL9LC Two-Post Vehicle Lift, *Installation and Operation Manual*, Part Number 5900592, Revision A1, released November 2025.

Copyright. Copyright © 2025 by BendPak Inc. All rights reserved. You may make copies of this document if you agree that: full attribution goes to BendPak Inc., you are not authorized to make changes to the content, you do not gain any rights to this content, and you will not use the copies for commercial purposes.

Trademarks. Apex, and the Apex logo, BendPak and the BendPak logo are registered trademarks of BendPak Inc. All other company, product, and service names are used for identification only. All trademarks and registered trademarks mentioned in this manual are the property of their respective owners.

Limitations. Every effort has been made to ensure complete and accurate instructions are included in this manual. However, product updates, revisions, and/or changes may have occurred since this manual was published. BendPak reserves the right to change any information in this manual without incurring any obligation for equipment previously or subsequently sold. All drawings are reference only – do not scale. BendPak is not responsible for typographical errors in this manual. You can always find the latest version of the **manual for your product on the BendPak website**.

SCAN FOR DIGITAL PDF

Warranty. The BendPak warranty is more than a commitment to you: it is also a commitment to the value of your new product. Contact your nearest BendPak dealer or visit **www.bendpak.com/support/warranty** for full warranty details.

Safety. Your Lift was designed and manufactured with safety in mind. Your safety also depends on proper training and thoughtful operation. Do not set up, operate, maintain, or repair the Lift without reading and understanding this manual and the labels on the unit; ***do not use your Lift unless you can do so safely!***

Owner Responsibility. In order to maintain your product properly and to ensure operator safety, it is the responsibility of the product owner to read and follow these instructions:

- Follow all installation, operation, and maintenance instructions.
- Make sure product installation conforms to all applicable local, state, and federal codes, rules, and regulations, such as state and federal OSHA regulations and electrical codes.
- Read and follow all safety instructions. Keep them readily available for operators.
- Make sure all operators are properly trained, know how to safely operate the unit, and are properly supervised.
- Do not operate the product until you are certain all parts are in place and operating correctly.
- Carefully inspect the product on a regular basis and perform all maintenance as required.
- Service and maintain the unit only with approved replacement parts.
- Keep the manual with the product and make sure all labels are clean and visible.
- **BendPak** makes no promises, guarantees or assurances that our products meet any state, county, federal or international mandated permit, license, code, standard, certification, or any other mandate other than what is listed or shown on BendPak website(s), or any BendPak online or published catalog. Not all BendPak lift models meet the standards as prescribed by ANSI/ALI ALCTV-(current edition) or ANSI/UL 201. Consult **www.autolift.org** for a complete list of lift models that meet ANSI/ALI ALCTV-(current edition) or ANSI/UL 201, or contact BendPak via **https://www.bendpak.com/support** ***Buyer assumes full responsibility for any state, county, federal or international mandated permit, license, code, standard, certification, or any other mandate required related to the installation and/or operation of any BendPak product.*** BendPak will not be responsible for any charges, fines, liens, or other levies imposed on the Buyer related to any special or regional structural, seismic or any other building code and/or codes such as the Uniform Building Code (UBC), International Building Code (IBC), or any other state, county, federal or international mandated permit, license, code, standard, certification, or other mandate, law, rule, regulation or directive by any other agency, government, administrations, or corporations whether state, county, federal, or international mandated.
- **Only use the Lift if it can be used safely!**

Unit Information. Enter the Model Number, Serial Number, and the Date of Manufacture from the ID label on your unit. This information is required for part or warranty issues.

Model: _____

Serial: _____

Date of Manufacture: _____

Designed and engineered by BendPak Inc. in Southern California, USA. Made in China.

Table of Contents

Introduction 4
Shipping Information 5
Safety Considerations 5
FAQ 8
Components 9
Specifications 11
Installation Checklist 13
Installation 14
Operation 48
Maintenance 56
Troubleshooting 62
Wiring Diagrams 64
Labels 65
Parts 68
ALI Store 74
Maintenance Log 75

Introduction

This manual describes the installation and operation of the Apex AL9LC Two-Post Vehicle Lift.

More information about the full line of BendPak products is available at **bendpak.com**.

⚠ **DANGER** Be very careful when installing, operating, maintaining, or repairing this equipment; failure to do so could result in property damage, product damage, injury, or (in very rare cases) death. Make sure only authorized personnel operate this equipment. An authorized technician must perform all repairs. Do not make modifications to the Lift; this voids the warranty and increases the chances of injury or property damage. Make sure to read and follow the instructions on the labels on the unit.

This manual is mandatory reading for all users of the AL9LC Two-Post Vehicle Lift, including anyone who installs, operates, maintains, or repairs them. Always keep this manual on or near the equipment.

Technical support and service is available from your dealer, on the Web at **bendpak.com/support**, by email at **support@bendpak.com**, or by phone at **(800) 253-2363** follow the prompts to reach support.
Online chat is also available at **www.bendpak.com** click the chat icon.

Scan this QR Code for up-to-date information and videos on the BendPak Lift series.

SCAN FOR VIDEO

Shipping Information

Your equipment was carefully checked before shipping. Nevertheless, you should thoroughly inspect the shipment ***before*** you sign to acknowledge that you received it.

When you sign the bill of lading, it tells the carrier that the items on the invoice were received in good condition. *Do not sign the bill of lading until **after** you have inspected the shipment.* If any of the items listed on the bill of lading are missing or damaged, do not accept the shipment until the carrier makes a notation on the bill of lading that lists the missing or damaged goods.

If you discover missing or damaged goods ***after*** you receive the shipment and have signed the bill of lading, notify the carrier at once and request the carrier to make an inspection. If the carrier will not make an inspection, prepare a signed statement to the effect that you have notified the carrier (on a specific date), and that the carrier has failed to comply with your request.

It is difficult to collect for loss or damage after you have given the carrier a signed bill of lading. If this happens to you, file a claim with the carrier promptly. Support your claim with copies of the bill of lading, freight bill, invoice, and photographs, if available. Our willingness to assist in helping you process your claim does not make us responsible for collection of claims or replacement of lost or damaged materials.

Safety Considerations

Read this entire manual carefully before using your new product. Do not install or operate the product until you are familiar with all operating instructions and warnings. Refer to information from ALI (see page 74) for more information about safely installing your Lift.

⚠ **WARNING** **California Proposition 65**. This product can expose you to chemicals including styrene and vinyl chloride which are on the list of over 900 chemicals identified by the State of California to cause cancer, birth defects or reproductive harm. **ALWAYS** use this product in accordance with BendPak's instructions. For more information go to **www.P65Warnings.ca.gov**.

⚠ **WARNING** BendPak does not supply hydraulic fluid or lubricants with this lift. **Always** refer to the Material Safety Data Sheet (MSDS) for safe handling and disposal information. MSDS are available from the hydraulic fluid or lubricant's supplier or manufacturer.

IMPORTANT SAFETY INSTRUCTIONS!

Save these instructions!

1. Read all instructions.
2. Care must be taken as burns can occur from touching hot parts.
3. Do not operate equipment with a damaged cord or if the equipment has been dropped or damaged – until a qualified service person has examined it.
4. Do not let a cord hang over the edge of a table, bench, or counter or come into contact with hot manifolds or moving fan blades.

5. If an extension cord is necessary, a cord with a current rating equal to or more than that of the equipment should be used. Cords with a current rating less than the equipment may overheat. Care should be taken to arrange the cord so that it will not be tripped over or pulled.
6. Always unplug the equipment from the electrical outlet when not in use. Never use the cord to pull the plug from the outlet. Grasp the plug and pull to disconnect.
7. Let the equipment cool completely before putting away. Loop cord loosely around equipment when storing.
8. To reduce the risk of fire, do not operate in the vicinity of open containers of flammable liquids (gasoline); this device is not intrinsically safe. Internal Arcing may ignite combustible gases.
9. Adequate ventilation should be provided when working on operating internal combustion engines.
10. Keep hair, loose clothing, fingers, and all parts of body away from moving parts.
11. To reduce the risk of electric shock, do not use on wet surfaces or expose to rain.
12. Use only as described in this manual. Use only BendPak recommended attachments.
13. ALWAYS WEAR SAFETY GLASSES. Everyday eyeglasses only have impact resistant lenses, they are not safety glasses.
14. To reduce the risk of injury, close supervision is necessary when this product will be used around children.
15. To reduce the risk of injury, ***never*** attempt to lift more than the rated capacity. Refer to loading instructions.
16. The Lift uses electrical energy; if your organization has Lockout/Tagout policies, make sure to implement them after connecting the Lift to a power source.
17. Refer to markings for proper load on electrical receptacles.
18. Only operate your Lift between temperatures of +41°F to +104°F (+5°C to +40°C).
19. The Lift should ***only*** be operated by authorized personnel. Keep *children* and *untrained personnel* ***away*** from the Lift.
20. Do not make *any* modifications to the Lift; this voids the warranty *and* increases the chances of injury or property damage.
21. Do not use the Lift while tired or under the influence of drugs, alcohol, or medication.
22. Consider the work environment. Keep the work area clean. Cluttered work areas invite injuries. Keep areas well lit.
23. **Always** make sure the Lift is *secured* on Safety Locks ***before*** attempting to work on or near a vehicle.
24. Make a thorough inspection of the Lift at least once a year. Replace any damaged or severely worn parts, decals, or warning labels. Replace worn or damaged parts with BendPak or BendPak approved parts and assemblies only.
25. BendPak recommends referring to the ANSI/ALI ALIS Standard *Safety Requirements for Installation and Service* for more information about safely installing, using, and servicing your Lift.
26. The AL9LC Two-Post Vehicle Lift is a Vehicle Service Lift. ***Use it only for its intended purpose.***
27. You ***must*** wear OSHA-approved (publication 3151) personal protective equipment at all times when installing, using, maintaining, or repairing the Lift. Leather gloves, steel-toed work boots, eye protection, back belts, and hearing protection are ***mandatory***.
28. Keep loads balanced on the Lift Arms. Clear the area immediately if a Vehicle is in danger of falling off the Lift. Do not make any modifications to the Lift.

29. Modifications void the warranty and increase the chances of injury or property damage. *Do not modify any safety-related features in any way*.
30. Make sure all operators read and understand this Installation and Operation Manual. *Keep the manual near the Lift at all times.*
31. While handling a Hydraulic Cylinder or a Hydraulic Hose, ***always*** wear gloves. In rare cases, a needle-like stream of hydraulic fluid (even at low pressure) can penetrate fingers, hands, or arms; such a puncture can feel like a bite, electric shock, or a prick. While it may *seem* like a minor issue, any amount of Hydraulic Fluid injected into the human body is a serious issue. Anyone suffering such a puncture wound should be ***immediately*** taken to a hospital emergency room to determine the extent of the injury. Explain the circumstances of the injury to the attending physician, including what kind of Hydraulic Fluid was involved. Do not assume a puncture wound that could have been caused by Hydraulic Fluid is a minor issue; it could be life threatening.
32. Make an inspection of the Lift ***before*** using it. Check for damaged, worn, or missing parts. Do not use it if you find any of these issues. Instead, take it out of service, then contact an authorized repair facility, your dealer, or BendPak at **(800) 253-2363**, then follow the prompts. **support@BendPak.com**.

⚠ DANGER Always refer to the lubricant and hydraulic fluid manufacturer's Material Safety Data Sheet (MSDS) for proper handling and disposal of chemicals.

Symbols

Following are the symbols used in this manual:

⚠ DANGER Calls attention to an immediate hazard that **will** result in injury or death.

⚠ DANGER Calls attention to an electrical shock hazard that **will** result in injury or death.

⚠ WARNING Calls attention to a hazard or unsafe practice that **could** result in injury or death.

⚠ CAUTION Calls attention to a hazard or unsafe practice that could result in minor personal injury, product, or property damage.

NOTICE Calls attention to a situation that, if not avoided, could result in product or property damage.

Tip Calls attention to information that can help you use your product better.

Liability Information

BendPak Inc. assumes **no** liability for damages resulting from:

- Use of the product for purposes other than those described in this manual.
- Modifications to the equipment without prior, written permission from BendPak Inc.
- Injury or death caused by modifying, disabling, overriding, or removing safety features.
- Damage to the equipment from external influences.
- Incorrect operation of the equipment.

Frequently Asked Questions

Question: What kinds of Vehicles can I raise on my AL9LC Two-Post Vehicle Lift?

Answer: Cars, trucks, SUVs, or similar; up to 9,000 lbs. (4,082 kg) each.

Q: How long will it take to raise or lower my Vehicle?

A: Anywhere from 30 to 60 seconds, depending on how high you raise it.

Q: Does the Lift have to be anchored in place?

A: Yes. Two-Post Lifts ***must*** be anchored. Your Lift is delivered with high-quality Anchor Bolts; use ***only*** the Anchor Bolts delivered with your Lift.

Q: How thick does my concrete have to be?

A: The concrete should be 4.25 in. thick min., 3,000 PSI, cured for a minimum of 28 days. Do not install the Lift on cracked or defective concrete. ***Do not install on asphalt or any surface other than concrete***.

Q: Can I install my Lift outside?

A: No. All BendPak Two-Post Lifts are approved for indoor installation and use only. ***Outdoor installation is prohibited***.

Q: How many Safety Lock positions does my Lift have?

A: The **AL9LC** has 19 Safety Lock Positions spaced roughly 3 in. (76 mm) apart.

Q: Does the Lift have a Front and Rear?

A: Yes and no. It is possible to drive onto a Two-Post Lift from either opening, there is technically no Front or Rear. However, most garages or service bays have an Approach side and a Wall side, so in that case, the Wall side is the Front, and the Approach side is the Rear.

Q: How long can I leave a Vehicle raised up on my Lift?

A: Indefinitely, if you leave the Lift *engaged* on its Safety Locks. Once the Lift is engaged on its Safety Locks, gravity holds it in position. ***Only leave your Lift either on the ground (fully lowered) or engaged on its Safety Locks***.

Q: How do I know where to put the Adapters when I want to raise a Vehicle?

A: The Vehicle needs to be balanced on the Lift, so you must position the Adapters (sometimes called Pads) so that they contact the manufacturer's recommended Lifting Points. ***If you do not know where the manufacturer's recommended Lifting Points are on a Vehicle, you must find out before you raise it***. **ALI publishes guides** for many vehicle types and manufacturers (see page **74**) which can be helpful.

Components

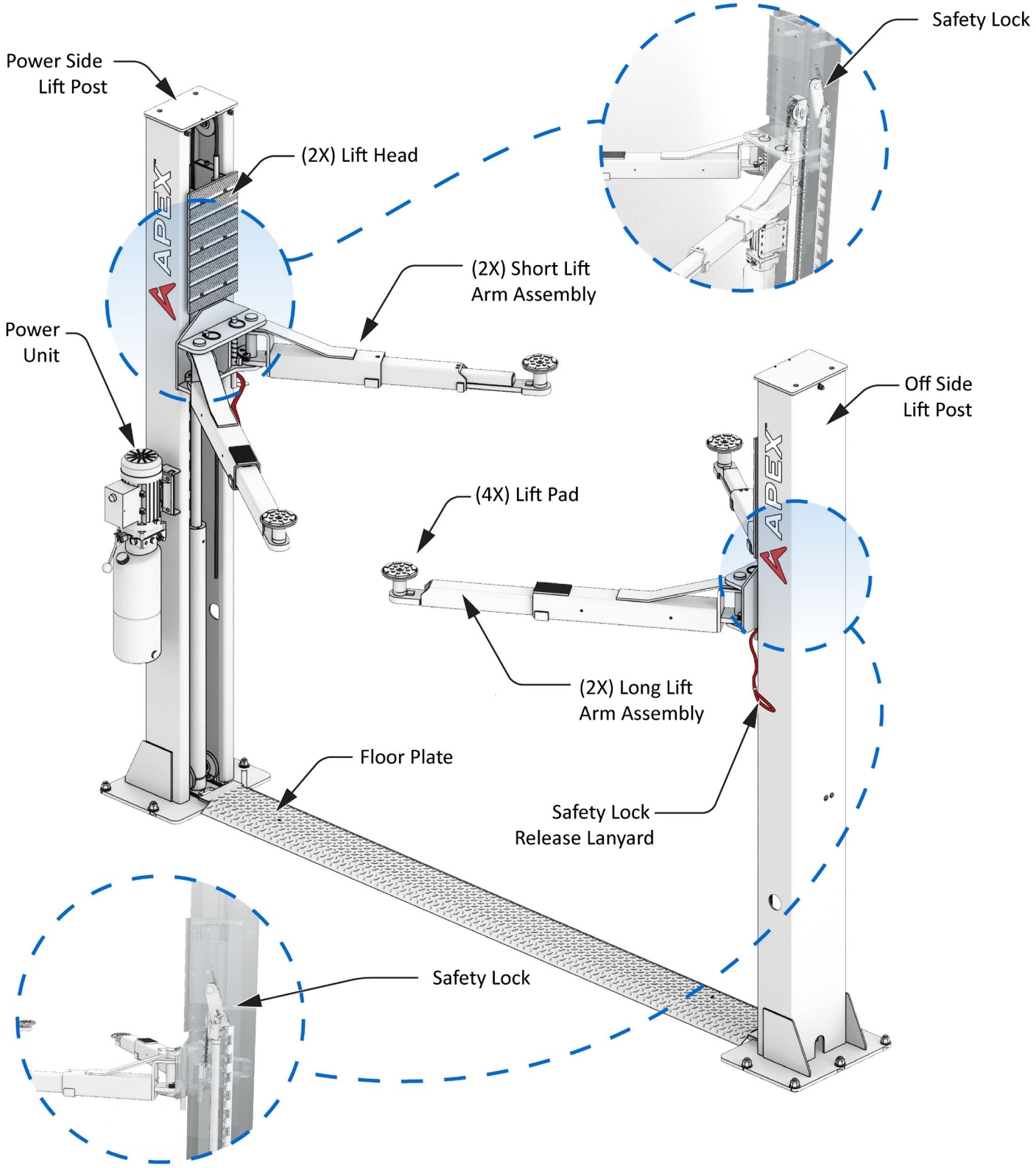
Safety Lock
Power Side
Lift Post
(2X) Lift Head
(2X) Short Lift
Arm Assembly
Power
Unit
Off Side
Lift Post
(4X) Lift Pad
(2X) Long Lift
Arm Assembly
Floor Plate
Safety Lock
Release Lanyard
Safety Lock

Lift Components include:

- **Power Side Post** — The power side post holds the power unit, one safety lock release lanyard, and the lowering handle (as a part of the power unit).
- **Off Side Post** — The lift post without the power unit mounting bracket; has one safety lock release lanyard.
- **Power Unit** — Is an electric hydraulic pump that provides hydraulic fluid under pressure to the lift cylinders and connects to an appropriate electrical power source. Controls include the up button, and the lowering valve handle. Hydraulic fluid is held in a reservoir below the pump motor.
- **Safety Lock Release Lanyard** — These hang out from under the Liftheads, and are routed through an attached grommet towards the Lift Operator. Once both Lift Arms are raised beyond Safety Position, a firm tug on each Lanyard should release the Safety Locks.
- **Floor Plate** — A formed steel plate covering the hydraulic hoses, equalizing cables, and safety cable being routed to each lift post.
- **Lift Heads** — Sometimes called carriages. Lift heads move up and down in the posts. They are connected to the lift arms, so that when the lift heads move up, the lift arms also move up, thus raising any vehicle on the lift arms.
- **Lift Arms** —Telescoping steel arms that attach to the lift heads. Lift pads and adapters attach at the end of each lift arm.
- **Lift Pads/Adapters** — Pads that contact the lifting points on the underside of the vehicles you raise. Four round adjustable lift pads are included with the lift. Optional pads and adapters are available separately and include height adapters, and frame cradle pads, which are well-suited for raising and holding trucks and SUVs (body-on-frame style vehicles).
- **Safety Locks** — Mechanically hold the lift heads up when engaged. Multiple safety lock heights let you select the best height for the service task. Once engaged on its safety locks, the lift heads stay up, even if the lift loses power. Only leave your lift fully lowered or engaged on safety locks.

  Safety locks are hidden between the lift head and the lift post, but you can hear them engage as the lift rises. Refer to **About Safety Locks** for more information.

Specifications

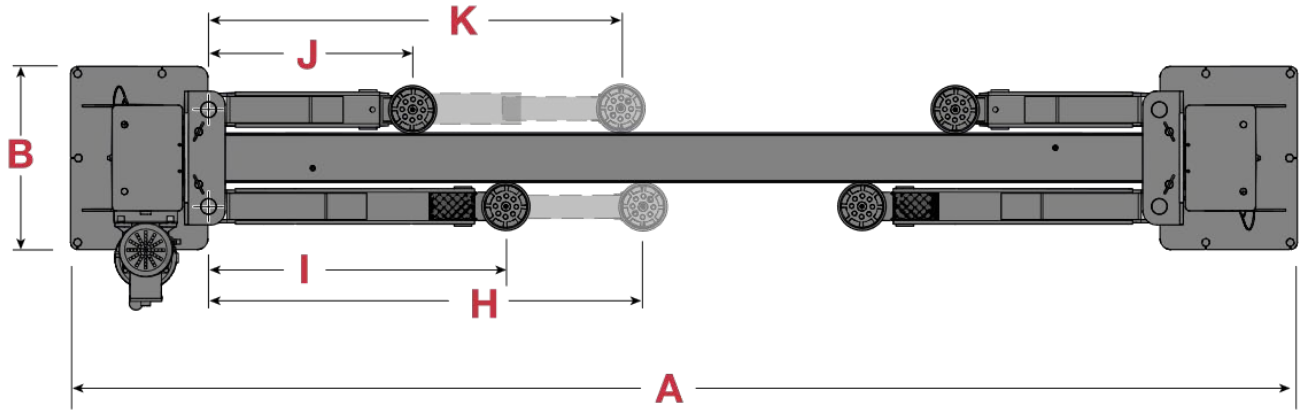

Top View

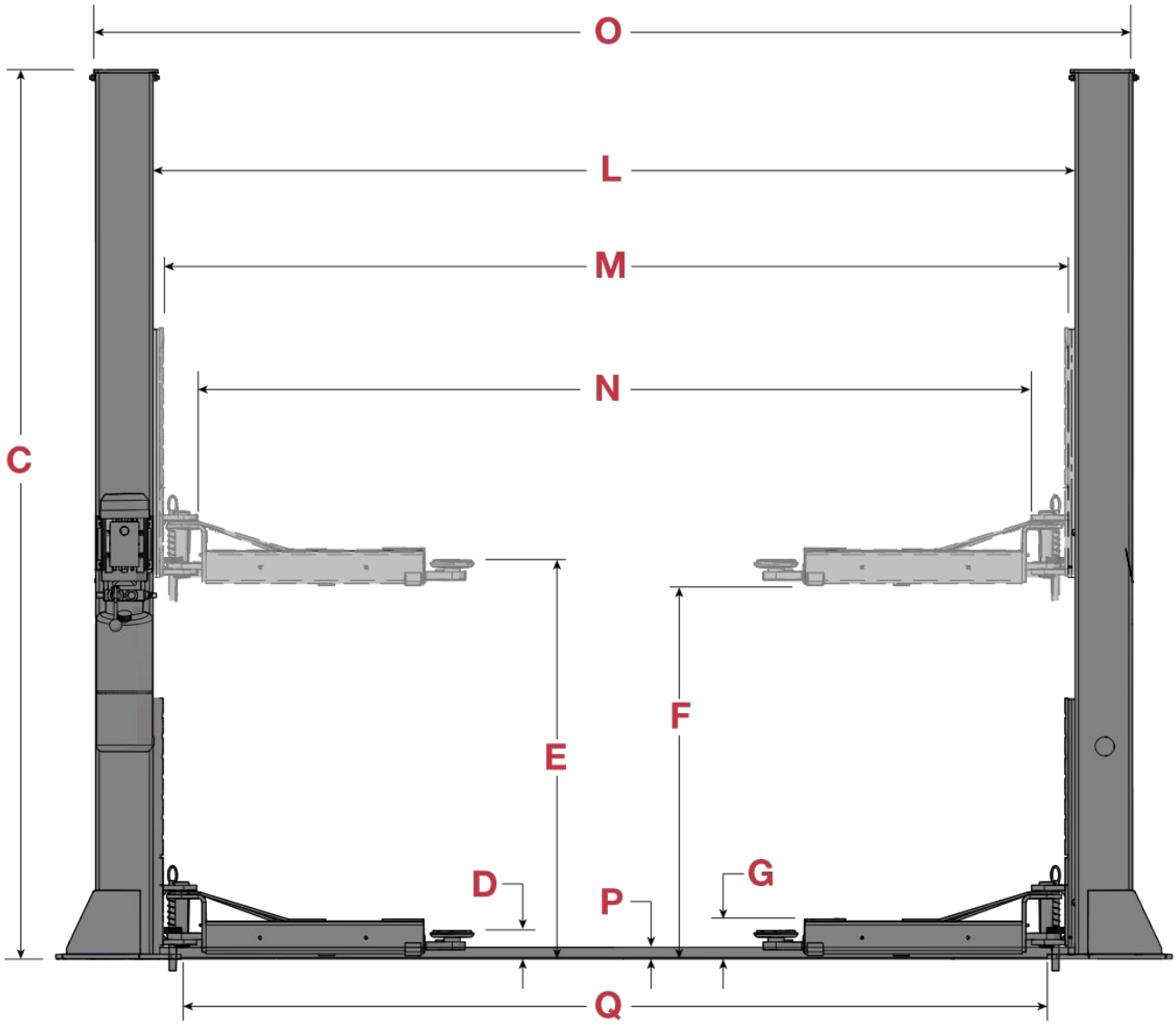

Approach View

Specifications

Specification	Value
Lifting Capacity	9,000 lbs. (4,082 kg)
Maximum Capacity – Front Axle	4,500 lbs. (2,041 kg)
Maximum Capacity – Rear Axle	4,500 lbs. (2,041 kg)
Maximum Capacity per Lift Arm	2,250 lbs. (1,021 kg)
A – Width Overall	137 in. (3,486 mm)
B – Base Plate Width	20.5 in. (520 mm)
C – Post Height	109.5 in. (2,779 mm)
D – Minimum Height w/Pad	4 in. (100 mm)
E – Maximum Lifting Height [1]	73.25 in. (1,860 mm)
F – Maximum Rise to Bottom of Lift Arm	70 in. (1,780 mm)
G – Minimum Height to Top of Lift Pad	5.25 in. (131 mm)
H & I – Rear Arm Reach (min. – max.) [3]	33.25 in. to 53.50 in. (845 mm to 1,360 mm)
J & K – Front Arm Reach (min. – max.) [1]	23 in. to 43.25 in. (585 mm to 1,100 mm)
L – Inside Posts	113.25 in. (2,880 mm)
M – Inside Scratch-Preventing Pads on Posts	111 in. (2,817 mm)
N – Drive-Thru	102.75 in. (2,608 mm)
O – Outside Posts	127.5 in. (3,238 mm)
P – Floor Plate Height	1 in. (27 mm)
Q – Floor Plate Width	106.50 in. (2,706 mm)
Safety Lock Positions	19 Positions spaced every 3 in. (76 mm)
Time to Full Rise	≈58 Seconds
Hydraulic Fluid Required	3.2 gallons (12.11 Liters)
Standard Motor **	208-230 VAC, 50/60 Hz, 1 Phase, ≈ 23 Amps
Operating Temperature	32° to 104°F (0° to +40°C)
Sound Pressure	<81 dB peak level

[1] *Max. Lifting Height w/Pad* is the max. height while not engaged on a Safety Lock and without adjustment or adapter(s).
[2] *Maximum Rise* is the maximum lifting height not engaged on the Safety Lock.
***** *Lifting Height w/Pad* is maximum lifting height with Pads at lowest height, no height adapter. *Maximum Lifting Height* is maximum lifting height with Pads at top height and with the optional 2.5 in. (63 mm) adapter.

****** *Special voltages available upon request.*

Specifications subject to change without notice. Dimensions rounded to the nearest .25 in. (6 mm).

Installation Checklist

These are the steps required to install the AL9LC Two-Post Vehicle Lift; install in this order.

☐ 1. Review the safety rules and information in this Manual.

☐ 2. Plan for electrical work.

☐ 3. Make sure the necessary tools are available.

☐ 4. Review the Installation Orientation.

☐ 5. Review the clearances around and above the Lift.

☐ 6. Select the installation location.

☐ 7. Create chalk line guides for the Lift Posts.

☐ 8. Move the equalizing cables into position within each Lift Post.
Attach the shorter threaded rod end to the Lift Head.

☐ 9. Stand up the Lift Posts in the chalk Lines.

☐ 10 Install the Equalizing Cables, attach each threaded cable end on the opposite Post's Lift Head.

☐ 11. Anchor the Posts.

☐ 12. Review About Hydraulic Contamination.

☐ 13. Review About Thread Sealant.

☐ 14. Install the Power Unit, but do not connect to electrical power.

☐ 15 Install and Connect the Hydraulic Hoses.

☐ 16 Install Cylinder Chain and Roller.

☐ 17. Review About Arm Restraint Gears.

☐ 18. Install the Lift Arms.

☐ 19. Contact the Electrician.

☐ 20. Install the Power Disconnect Switch (***Electrician required***).

☐ 21. Install the Thermal Disconnect (if required by local electrical code).

☐ 22. Connect the Power Unit (***Electrician required***).

☐ 23. Perform final Leveling.

☐ 24. Lubricate the Lift.

☐ 25. Perform an Operational Test.

☐ 26. Review the final Checklist.

☐ 27. Deliver the *Installation and Operation Manual* to the owner/user/employer along with the other instructional materials furnished with the lift.

Installation

The installation process requires multiple steps. Perform them in the order listed.

Read the entire Installation section before beginning. Doing so will provide a better understanding of the process.

⚠ **WARNING** ***Only use the factory-supplied parts delivered with your Lift***. If you use parts from a different source, you void your warranty and compromise the safety of everyone who installs or uses the Lift. If parts are missing, visit **bendpak.com/support** or call **(800) 253-2363**, then follow the prompts.

Being Safe

While installing this equipment, your safety depends on proper training and thoughtful operation.

⚠ **WARNING** Do not install this equipment unless you have automotive Lift installation training. Always use proper lifting tools, such as a Forklift or Shop Crane, to move heavy components. Do not install this equipment without reading and understanding this manual and the safety labels on the unit.

⚠ **WARNING** Many of the Lift components are heavy and awkward to work with. Installation should be accomplished by competent personnel ensuring all heavy components are properly rigged and balanced for lifting. Installation personnel should have knowledge, training, and experience in lifting, rigging, and securing heavy objects.

Only fully trained personnel should be involved in installing this equipment. Always pay attention. Use appropriate tools and lifting equipment. Stay clear of moving parts.

BendPak recommends referring to the current version of the ANSI/ALI ALIS Standard *Safety Requirements for Installation and Service* for more information about safely installing, using, and servicing the Lift.

⚠ **WARNING** You ***must*** always wear OSHA-APPROVED (publication 3151) personal protective equipment when installing, using, maintaining, or repairing the Lift: leather gloves, steel-toed work boots, eye protection, back belts, and hearing protection are ***mandatory***.

Required Tools

You may need some or all the following tools:

- Rotary hammer drill or similar
- 3/4 in. (19 mm) carbide bit (conforming to ANSI B212.15)
- 11/32 in. (8-9 mm) carbide bit (pilot hole)
- Hammer, crow bar, and two sawhorses
- Four-foot level and 12 ft. (3,657 mm) ladder
- Open-end wrench set, SAE, and metric
- Socket and ratchet set, SAE, and metric
- Red and White Lithium Grease
- Hex key wrench set
- Medium crescent wrench, torque wrench, pipe wrench, circlip / retaining-ring pliers
- Chalk line (sometimes called snap-line)
- Medium-sized flat screwdriver and needle-nose pliers
- Tape measure 25 ft. min. (7,620 mm)
- Forklift, Shop Crane, or heavy-duty rolling dolly
- Hydraulic fluid: ≈3.6 gal. (12.1 liters)

Planning for Electrical Work

A licensed Electrician must be available at some point during the installation. There are many legitimate variations in wiring, local codes, and downright dangerous errors out in the real world that cannot be addressed in this manual. A licensed electrician has the proper equipment and training to ensure a safe installation.

Notify the Electrician in advance so that they arrive prepared with appropriate components for connecting to the power source, a Power Disconnect Switch, and a Thermal Disconnect if required by local code.

NOTICE Wiring must be provided by the Electrician; it is not supplied with the Lift.

DANGER A licensed Electrician must install all wiring. Verify electrical work conforms to all applicable local and federal codes, rules, and regulations, such as state and federal OSHA regulations and electrical codes.

The Electrician is required to:

- **Connect the Power Unit to an electrical power source**. The Power Unit is delivered with a pigtail for wiring to a power source. Have the Electrician remove the pigtail and wire from inside the electrical box on the Power Unit to a power cord and plug or have them wire it directly into the electrical system at the Lift location.

Note: Installing the Power Unit and connecting the Power Unit to the power source are *separate* procedures and are completed at different times in the installation process. You do not need an Electrician to install the Power Unit on the Power Post, but an Electrician is ***required*** to connect the Power Unit to the power source.

- **Install a Power Disconnect Switch**. Ensures you can quickly and completely interrupt electrical power to the Lift in the event of an electrical circuit fault, emergency, or when equipment is undergoing service or maintenance. Put it within sight and reach of the Lift operator.
- **Installing a Thermal Disconnect Switch**. The Power Unit supplied with this Lift ***does not*** include thermal overload protection. Under NEC 430, UL 201, and CSA C22.2 No. 68 intermittent duty motors are ***not*** required to include thermal protection. Local electrical codes may vary, and other requirements may exist that the installing electrician will address, as required.

DANGER If local Electrical codes require the installation of a Thermal Disconnect, the disconnecting device and the installation ***must*** be provided and installed by a licensed Electrician in accordance with local electrical codes. Do not perform ***any*** maintenance or installation on the Lift without first verifying that main electrical power has been disconnected from the Lift and ***cannot*** be re-energized until all procedures are complete.

Electrical Information

Important electrical information:

- Improper electrical installation can damage the Power Unit motor, which is not covered by the warranty.
- The Lift uses electrical energy; if your organization has Lockout/Tagout policies, make sure to implement them after connecting to a power source.
- Use a separate circuit breaker for each Power Unit.
- Protect each circuit with a time delay fuse or circuit breaker:
  - For a 208 to 230 VAC, single phase circuit, use a 25 amp fuse or circuit breaker.

Checking Clearances

For safety purposes, clear space *around and above* the Lift is ***required***. *Drawings are not to scale.*

AL9LC Lift Clearances

Top View

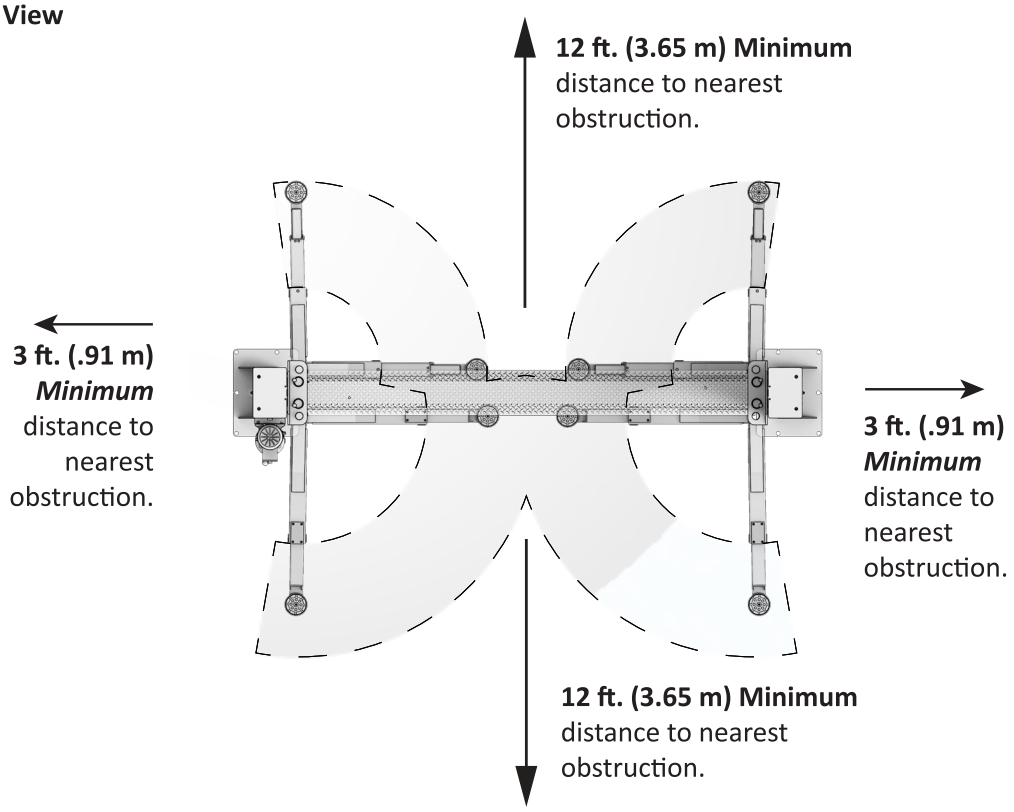

Note! Additional distance is required for Vehicles to be driven onto and off of the Lift.

Side View

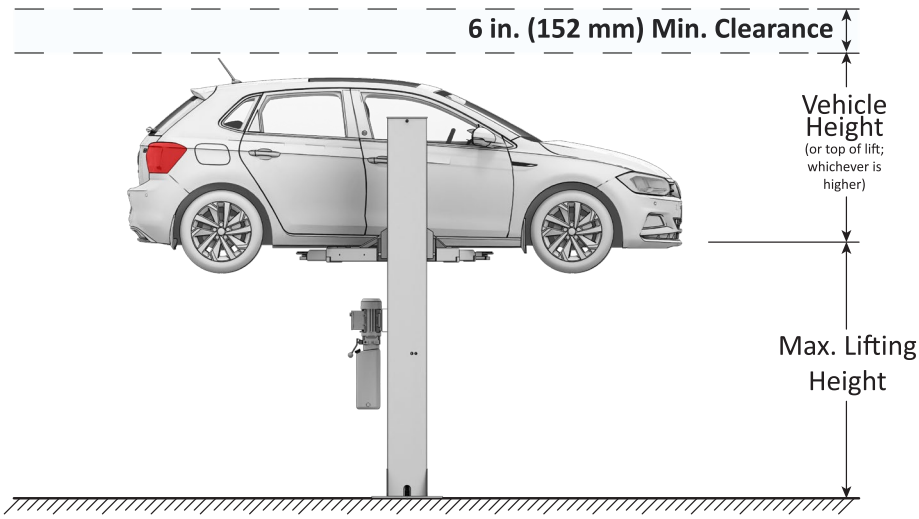

Lubricants and Hydraulic Fluid Required

The following hydraulic fluid and lubricants are required, but are not supplied with the Lift.

- Any general-purpose ISO-32, ISO-46, or ISO-68 hydraulic oil
- White Lithium Multi-Purpose Lubricant
- Red Lithium Grease
- ALMASOL Wire Rope Lubricant or 90W Gear Oil

Selecting a Location

When selecting the location for your Lift, consider:

- **Architectural plans**. Consult the architectural plans for the desired location. Make sure there are no contradictions between what is planned and what the architectural drawings will allow.
- **Available space**. Make sure there is enough space for the Lift: front, back, sides, and ***above***. Refer to **Specifications** for exact measurements.
- **Overhead Clearance**. Check for overhead obstructions such as building supports, heaters, electrical lines, low ceilings, hanging lights, and so on. Use the maximum lifting height of your Lift model plus the height of the tallest vehicle you plan on raising to determine how much height you will need at the Lift location.

Power

An appropriate electrical power source for the Lift's Power Unit is required.

DANGER The Power Unit supplied with this Lift *does not* include thermal overload protection. Under NEC 430, UL 201, and CSA C22.2 No. 68 intermittent duty motors are not required to include thermal protection. Local electrical codes may vary, and other requirements may exist that the installing electrician will address, if required.

DANGER If local Electrical codes require the installation of a Thermal Disconnect, the disconnecting device and the installation ***must*** be provided by a licensed Electrician in accordance with local electrical codes. Do not perform ***any*** maintenance or installation on the Lift without first verifying that main electrical power has been disconnected from the Lift and ***cannot*** be re-energized until all procedures are complete.

DANGER Risk of explosion: The Power Unit has internal components that may spark and should not be exposed to flammable vapors. This device is not intrinsically safe. Internal Arcing may ignite combustible gases. Never mount the power unit motor lower than 18 in. above the ground.

DANGER Never expose the Power Unit motor to rain or other damp environments. Damage to the motor caused by water is ***not*** covered by the warranty.

- **Outdoor installations**. Your Lift is approved for ***indoor installation and use only***. *Outdoor installation is prohibited*.
- Do **not** install the Lift on any surface other than steel reinforced concrete conforming to the minimum compressive strength, aging, reinforcement, and thickness stated in these requirements.
- **Never** install the Lift over a concrete expansion joint.
- All Anchors **must** be a minimum of 6 in. (152 mm) away from any expansion seams, control joints or other inconsistencies in the concrete.
- **Never** install the Lift on hand-mixed concrete.
- Do **not** install the Lift on a secondary floor level or on any ground floor with a basement beneath without written authorization from the building Architect and prior approval of BendPak Inc.

DANGER Installing your Lift on a surface with more than three degrees of slope could lead to injury or even death. Only install the Lift on a level floor (defined as no more than 3/8 of an inch difference over the installation area). If your floor is not level, consider making the floor level or using a different location.

- **Shimming**. If your concrete floor is not completely level, you can use Shims under the bases of the Posts, as needed, to level the Lift. To estimate your Shim requirements, use a transit level and targets to check for flatness. Use the provided shims, as necessary.

- **Concrete specifications**. Do not install the Lift within 6 in. (152 mm) of cracked or defective concrete. Make sure the concrete is at least 4.25 in. (108 mm) thick, 3,000 PSI, and cured for a minimum of 28 days.

⚠ **CAUTION** BendPak lifts are supplied with installation instructions and concrete anchors that meet the criteria set by the current version of the American National Standard "Automotive Lifts – Safety Requirements for Construction, Testing, and Validation," ANSI/ALI ALCTV. You are responsible for any special regional structural and/or seismic anchoring requirements specified by any other agencies and/or codes such as the Uniform Building Code (UBC) and/or International Building Code (IBC).

Be sure to check your floor for the possibility of it being a ***post-tension slab***. In this case, contact the building architect ***before*** drilling. Use of ground penetrating radar may be required find the tensioned steel.

⚠ **DANGER** Cutting through a tensioned Cable can result in injury or death. Do not drill into a post-tension slab unless the building architect confirms the area is free of tensioned steel or you have located it using ground penetrating radar. ***If colored sheath comes up during drilling, stop drilling immediately***.

- **Unloading the Lift components**. Unload the Lift components as close to the installation location as possible. The Lift includes a number of heavy components, so the closer you unload them to the installation location, the better off you will be.

⚠ **WARNING** Some Lift components are very heavy; if handled incorrectly, they can damage materials like tile, sandstone, and brick. Try to handle the Lift components just twice: once when delivered and once when moved into position. You must have a Forklift or Shop Crane to move some of the Lift components into position. ***Use care when moving Lift components***.

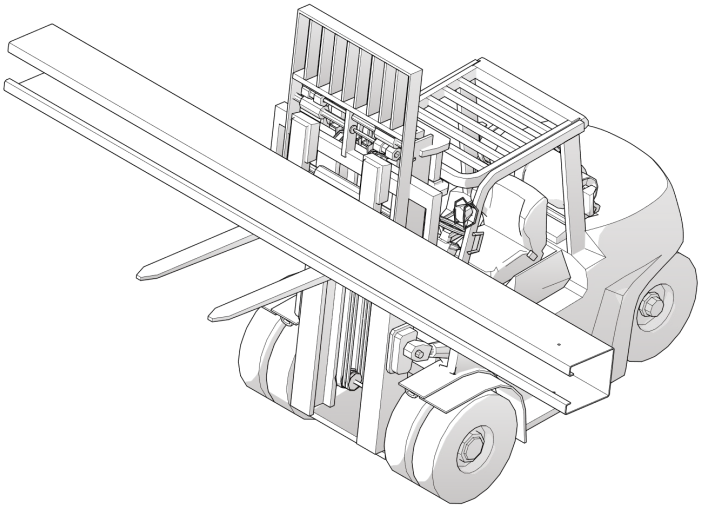

Creating Chalk Line Guides

Create Chalk Line Guides on the ground for the two Posts prior to moving them into position. Use the Width Overall value ***for your Lift model*** to determine where to place the Chalk Line Guides. The Width Overall value is the distance from the back of one base plate to the back of the other base plate.

This illustration demonstrates drawing the Chalk Line Guides for your Lift.

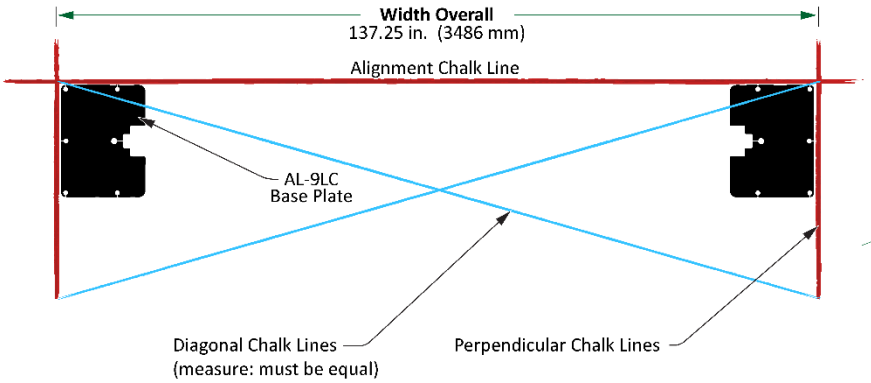

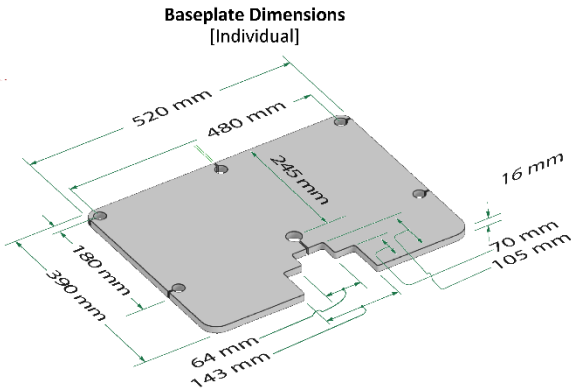

To add the Chalk Line Guides:

1. Determine the Lift's location.
2. Create an Alignment Chalk Line at the Front of the Lift; refer to the previous illustration.

   Make the Alignment Chalk Line *longer* than the Width Overall setting for your Lift model.
3. Create two equal length Perpendicular Chalk Lines at 90° angles to the Alignment Chalk Lines at the Width Overall distance for the Lift model you are installing. Confirm their perpendicularity by drawing diagonals connecting the corners and the ends of the Perpendicular Chalk Lines: measure those diagonals to be sure they are also equal.

   The two Perpendicular Chalk Lines must be 137.25 in. (3,486 mm) from each other.
4. Put the Post's Base Plates into the corners created by the Chalk Line Guides, as shown in the figure above.

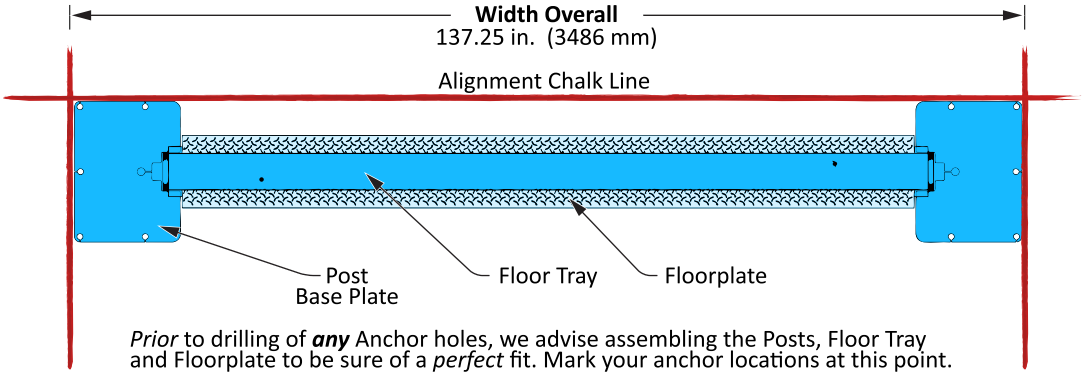

Attaching and adjusting equalizing cables

It is much easier to fix both Equalizing Cable Ends into position ***before*** you stand up the Lift Posts. The Equalizing Cables keep the Lift Heads synchronized. If one Lift Head lowers or raises faster than the other Lift Head; the Vehicle on the Lift would become unstable and could fall.
The equalizing cables are delivered with one end already installed on the Lift Head.

This illustration depicts an AL9LC Equalizing Cable; there are two.

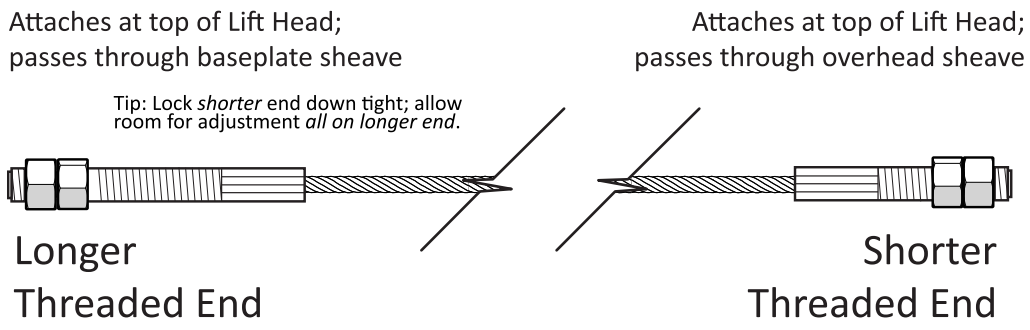

When Equalizing Cables are fully routed, they are mirror images of each other.

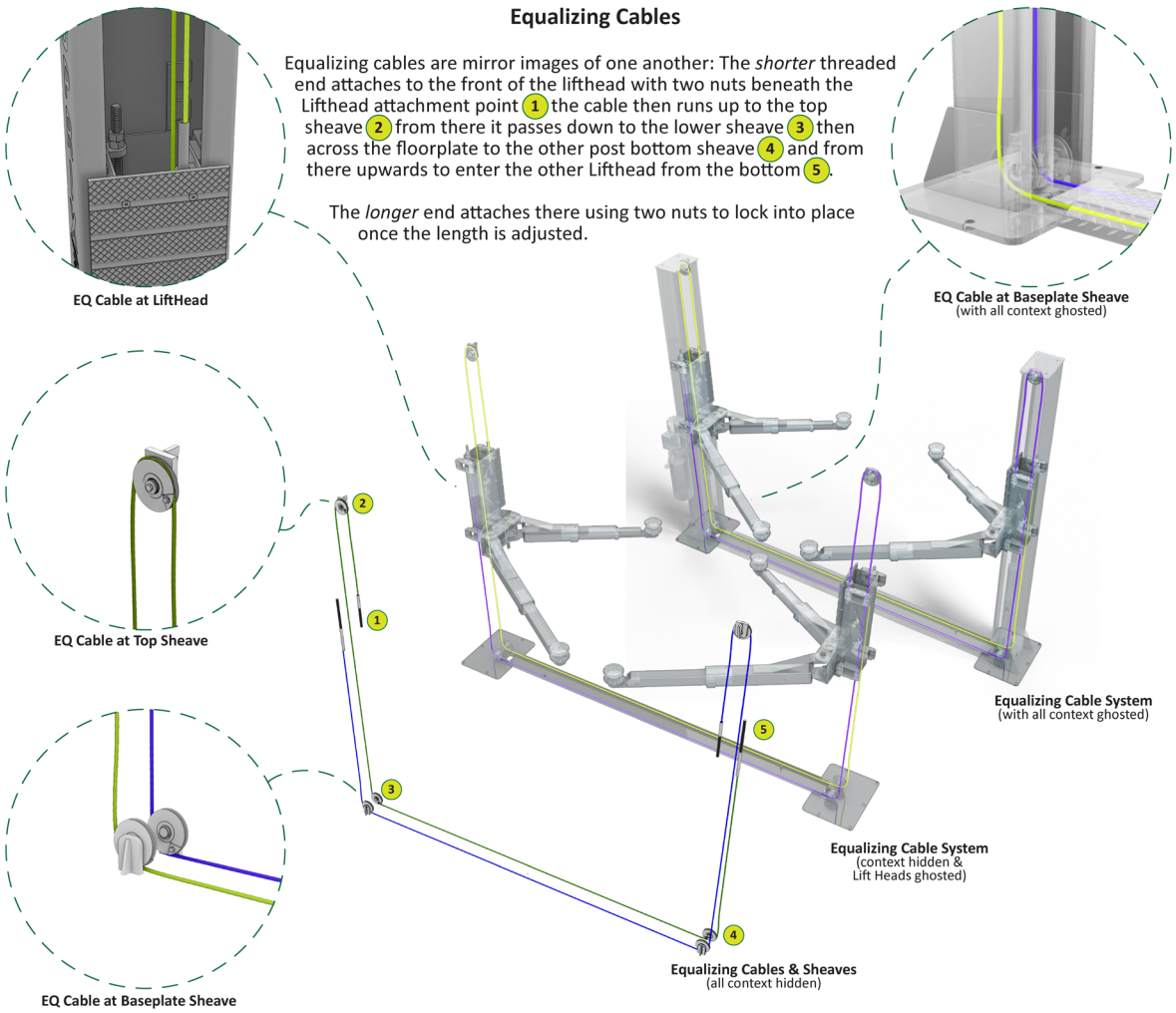

⚠ **CAUTION** BendPak recommends wearing gloves while handling the Equalizing Cables.

To install the Equalizing Cables in the AL9LC Lift:

1. Using a forklift or equivalent, move the Posts near the Chalk Lines.
2. Place both Posts either flat on the ground or with their tops elevated on a sawhorse or similar; the insides of the Posts need to be accessible, facing up.
3. Slide the Lift Heads away from the bottoms of both Posts by at least 24 in. (610 mm), to provide room to work; best practice would be to move them to the first Safety Lock position.

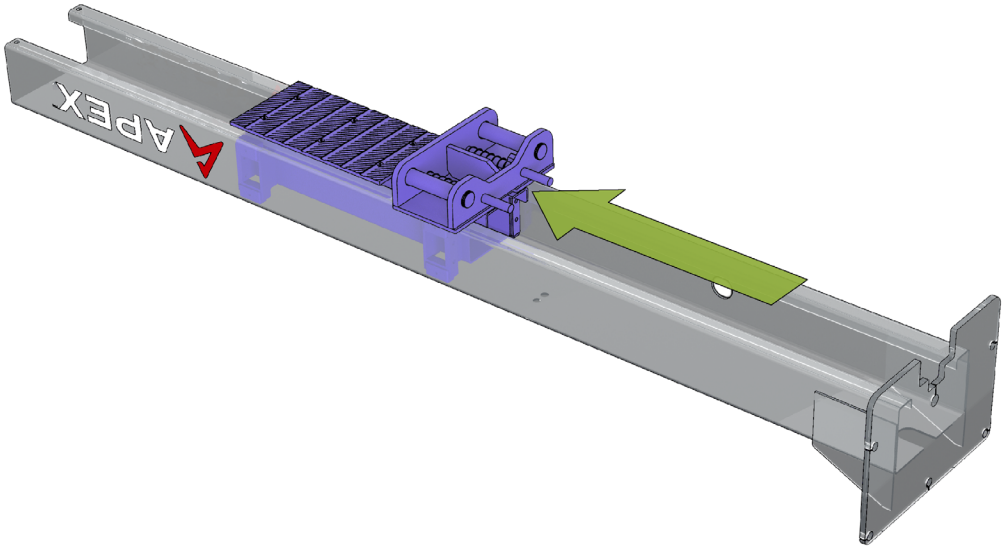

Not to Scale. Components removed or ghosted for clarity.

4. Remove the two Post Sheave Restraint Plates (wedge-shaped) from the Sheaves at the bottom of the Post. Keep the Restraint Plates, and Bolts handy; you will be re-installing them soon.

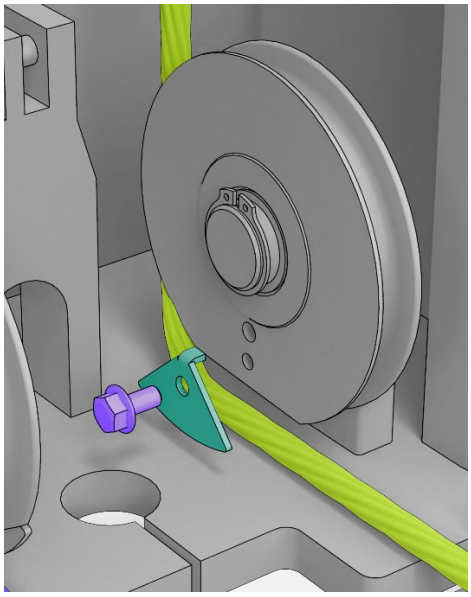

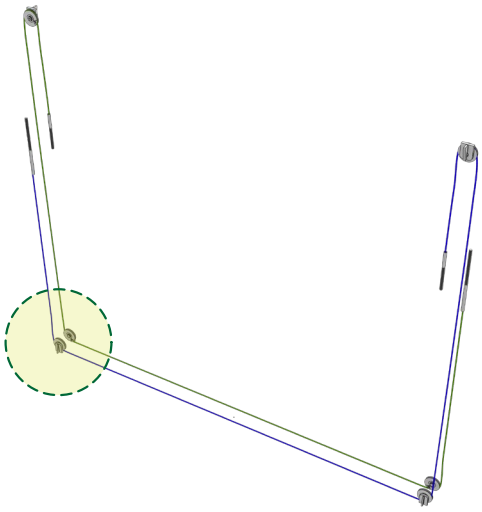

5. Ensure that the threaded rod end pre-installed at the Carriage Lock Plate located inside each Lift Head is well secured.

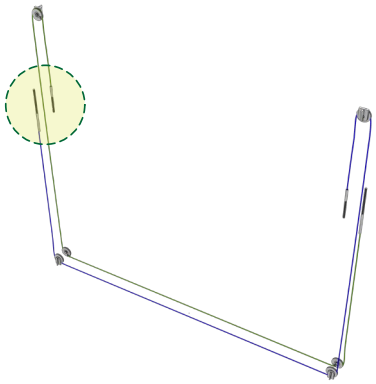

⚠ **CAUTION** Failure to secure end properly may result in Lifting Chain failure or Lift malfunction.

6. Route the Cable *upwards* to the Top Plate Sheave.
7. Install the Top Plates on the top of the Posts, remove the Restraint Plates (wedge-shaped) and thread the cable around the Sheave; re-assemble the Restraint Plate to the Sheave.

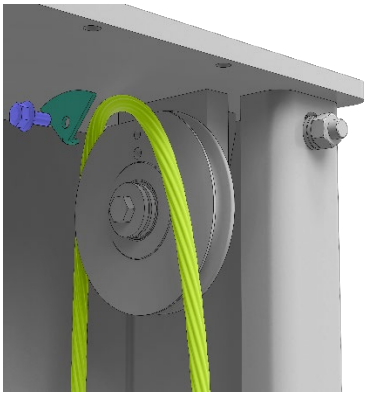

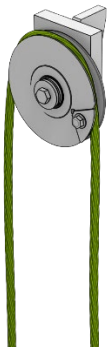

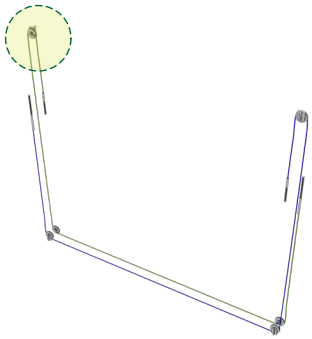

8. Route the Cable down the Lift Post and around the Sheave at the bottom of the Post and out to the Opposite Post.

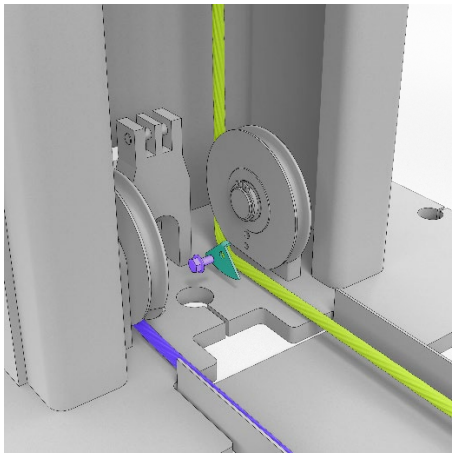

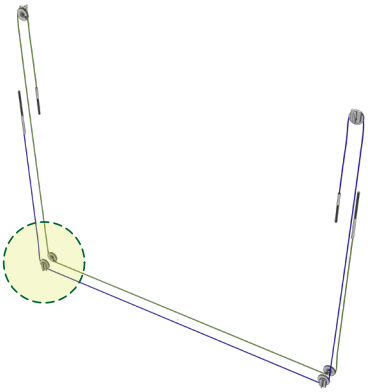

9. Route the Cable around the bottom Sheave and up to the Lift Head. Re-install the Restraint Plate.

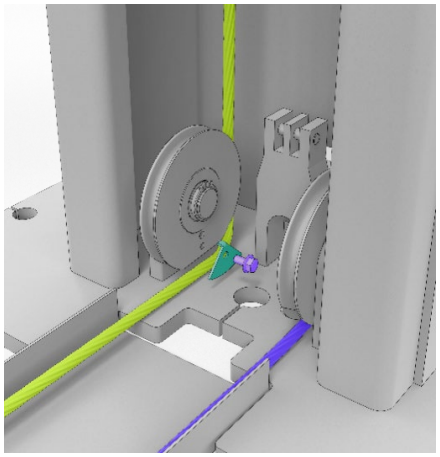

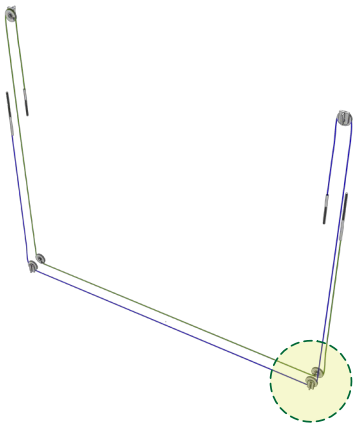

10. Insert the threaded end of the cable into the Lift Head. Use the Washer and Nut to loosely secure the cable end to the Lift Head – at this stage leave a lot of slack.

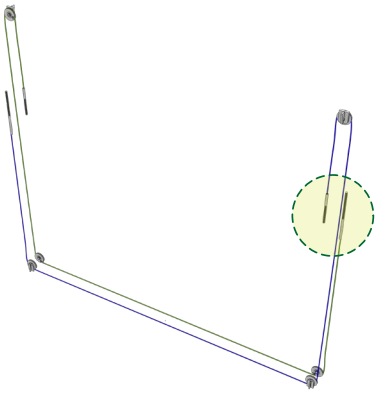

11. Retrieve the remaining Cable and repeat the procedure on the opposite Post.

Tip Make sure the shorter threaded rod ends of both the Equalizing Cables are securely fastened, tightening both nuts in place. Leave lots of slack for adjustment on the longer threaded rod end, as this will aide in final adjustment and decrease the need for to-and-fro.

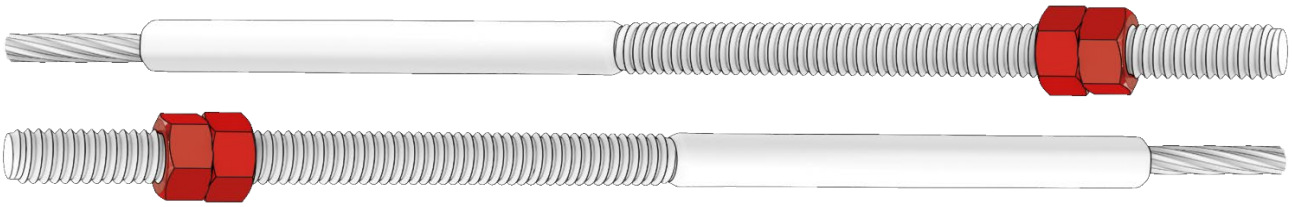

12. After the Cables are in place check to be sure all Restraint Plates (wedge-shaped) are correctly re-installed to their Sheaves.

13. Verify the Top Plate at the top of each post is properly secured.

14. Carefully disengage the Safeties, and move both Lift Heads back down to the bottom of each Post.

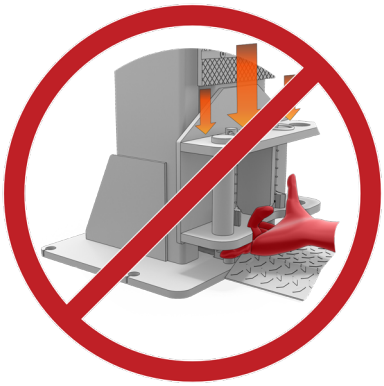

⚠ **DANGER** **Liftheads should be at bottom of post.** If Liftheads are ***not*** at lowest position, and are not properly secured, there is a crushing injury risk, as the Liftheads are heavy and can slide quickly and unexpectedly. If work is required under a Lifthead, brace with a jackstand or assure it is completely on its Safety Lock.

Anchoring the Posts

We strongly recommend having multiple people work together to install the Posts.

⚠ **DANGER** Pay ***special*** attention when installing the Posts. If done incorrectly, the Lift could fall over, potentially causing damage to the Vehicle, the Lift, and injuring bystanders.

Concrete specifications are:

- **Depth**: 4.25 in. (108 mm) thick; minimum
- **PSI**: 3,000 psi (207 bar), minimum
- **Cured**: 28 days, minimum

Anchor Bolt specifications are:

- **Length**: 6.3 in. (160 mm)
- **Diameter**: .75 in. (19 mm)
- **Anchor torque**: 85 to 95 ft. lbs.
- **Effective embedment**: 3.25 in. (82.5 mm) or more

The concrete floor where you want to install your Lift must meet the following requirements:

- The floor must be a flat, steel reinforced concrete floor. It must be level; ***do not install the Lift on a surface with more than three degrees of slope***.
- Do not install the Lift on cracked or defective concrete.
- Check the floor for the possibility of it being a *post-tension* slab. In this case, contact the building architect or the local department of building and safety before drilling. Using ground penetrating radar may help to locate the tensioned cable.

⚠ **DANGER** Cutting through a tensioned cable can result in injury or death. Do not drill into a post-tension slab unless the building architect confirms you are ***not*** going to hit a tensioned cable, or you have located it using ground penetrating radar. ***If colored sheath comes up during drilling, stop drilling immediately***.

⚠ **DANGER** Your concrete and Anchor Bolts ***must*** meet these specifications. Only install your Lift on a concrete surface. If you install a Lift on asphalt or any other surface, or your concrete or Anchor Bolts do not meet these specifications, it could lead to product damage, Vehicle damage, personal injury, or even loss of life.

BendPak Lifts are supplied with installation instructions and concrete fasteners meeting the criteria as prescribed by the latest version of the American National Standard “Automotive Lifts – Safety Requirements for Construction, Testing, and Validation.”

⚠ WARNING Use only the ALI-certified Anchor Bolts that came with your Lift. If you use components from a different source, you void your warranty and compromise the safety of everyone who installs or uses the Lift.

Lift buyers are responsible for conforming to all regional, structural, and seismic anchoring requirements specified by any other agencies and/or codes, such as the Uniform Building Code and/or International Building Code. If the existing concrete floor does not meet the minimum requirements ***BendPak strongly recommends consulting a concrete Specialist early in your planning process for the Lift installation***. The recommendations presented in this manual are generic in nature and cannot cover all situations. A concrete Specialist will adjust these recommendations to account for national, state, and local building codes as well as local weather conditions, soil composition, base preparation, load bearing, seismic requirements and any other structural concerns that may arise.

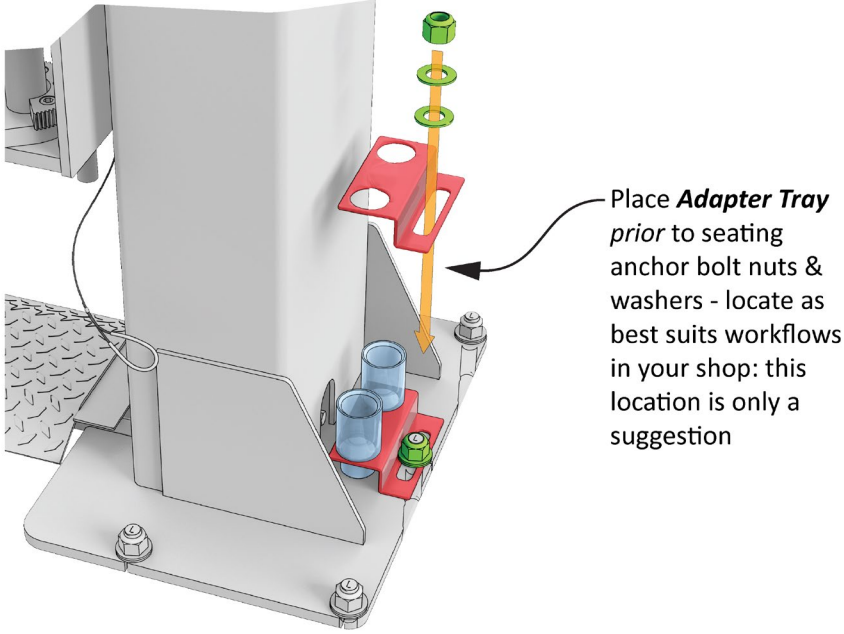

Plumb each post with a plumb bob to assure a vertical orientation.

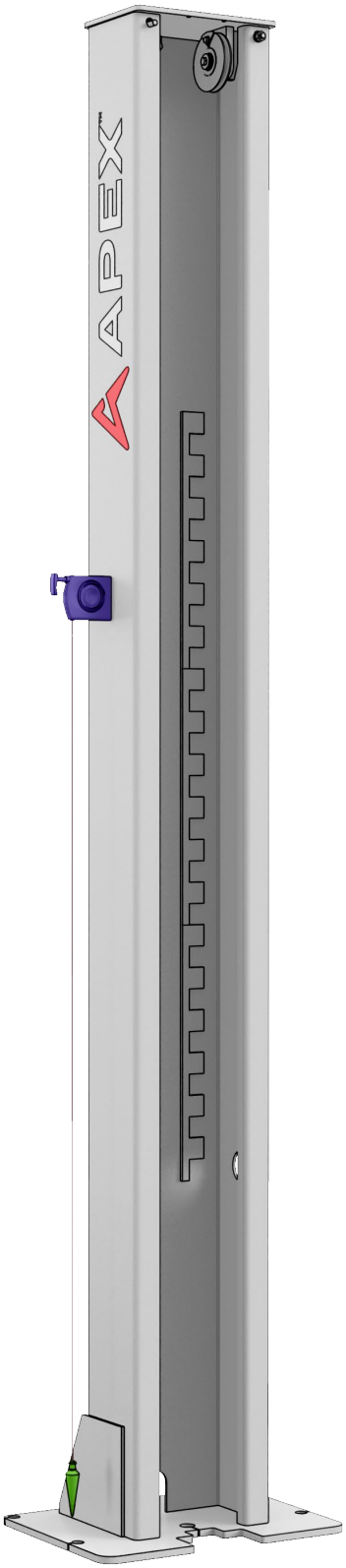

Effective Embedment is the location in the Hole where the Expansion Sleeve presses into the concrete. This is where the Anchor Bolts get their holding strength, the further down into the Hole, the greater the holding strength.

Nominal Embedment is how far down into the Hole the bottom of the Anchor Bolt is, which does not tell you anything about the holding strength.

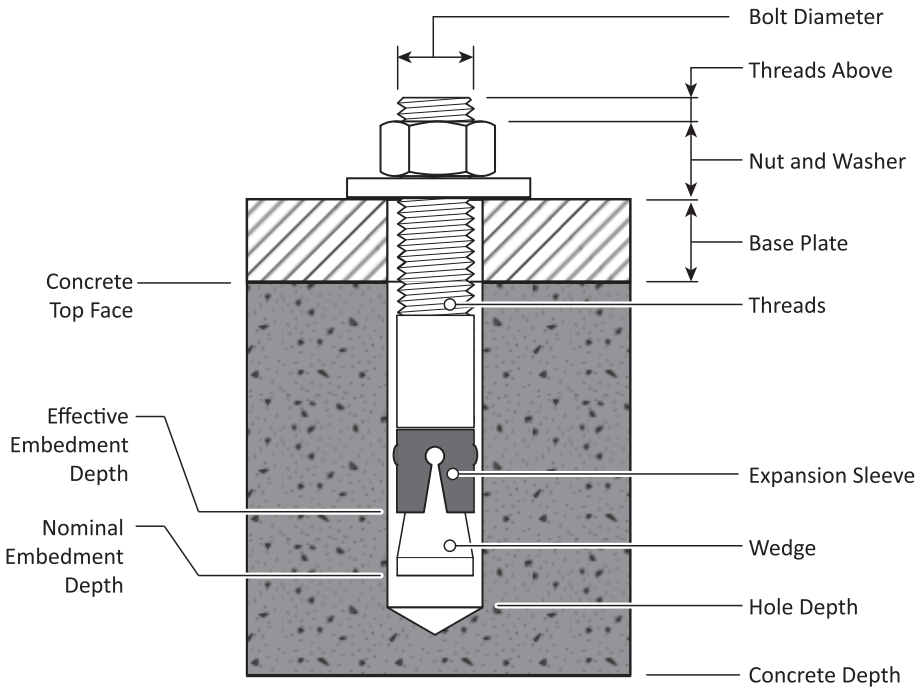

Not to scale. Components removed for clarity.

To install the Posts:

1. Using a Forklift or Shop Crane, move the Posts to the Chalk Line Guides you created earlier.
2. Stand up each Post, one at a time, and move it to the appropriate location.
3. Double check your measurements against the **Specifications** for your Lift model:
   - Distance from back of one Base Plate to back of the other Base Plate: **Width Overall** value
   - Distance from inside of one Post to inside of the other Post: **Inside Posts** value
4. Using the Base Plates as guides, drill each hole **4.5** in. deep; use a masonry bit.

   Do not drill all the way through the concrete; if you punch completely through the slab, you could compromise the holding strength of the Anchor Bolts.

   Drill in straight; do not let the drill wobble.

The diameter of the drill bit must be *the same* as the diameter of the Anchor Bolt. If you are using a ¾ in. diameter Anchor Bolt, for example, use a ¾ in. diameter drill bit.

5. Vacuum each hole clean. BendPak recommends using a Vacuum to get the hole very clean.

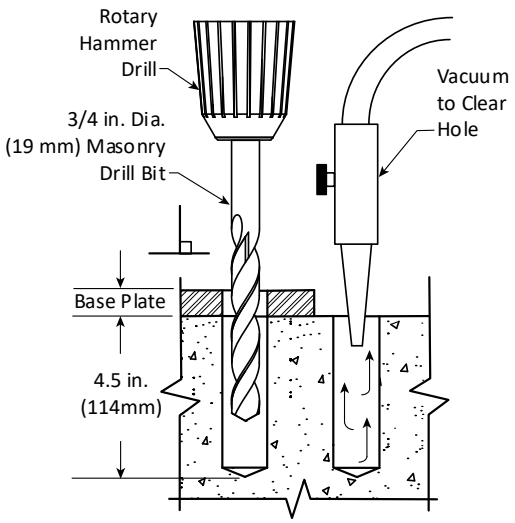

⚠ WARNING You must use the appropriate safety gear including safety glasses, dust masks, gloves, steel-toed work boots and heavy work clothes when anchoring the Posts.

You can also use a wire brush, hand pump, or compressed air; just make sure to thoroughly clean each hole.

Do not ream the hole. Do not make the hole any wider than the drill bit made it.

Important: The holding strength of an Anchor Bolt is partially based on the how cleanly the Expansion Sleeve presses against the concrete. If the hole is dirty or too wide, there is less holding strength.

6. Make sure the Washer and Nut are in place, then insert the Anchor Bolt into the hole.

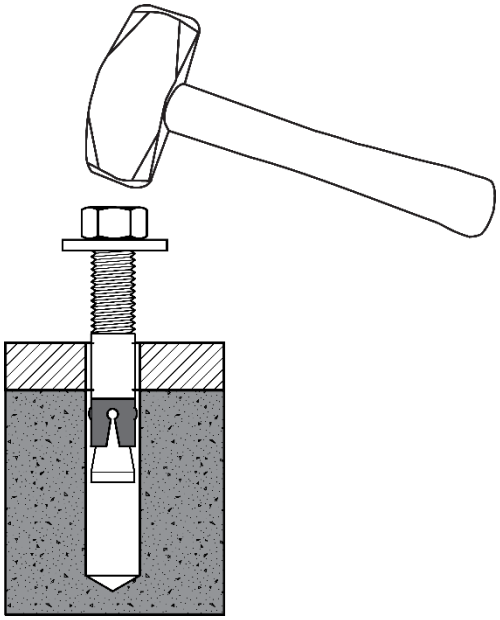

The Expansion Sleeve of the Anchor Bolt may prevent the Anchor Bolt from passing through the hole in the Base Plate; this is normal. Use a hammer or mallet to gently tap the Expansion Sleeve through the Base Plate and into the hole.

Even using a hammer or mallet, the Anchor Bolt should only go into the hole part of the way; this is normal. If the Anchor Bolt drops in with little or no resistance, the hole is too wide.

Once past the hole in the Base Plate, the Anchor Bolt eventually stops progressing down into the hole as the Expansion Sleeve contacts the sides of the hole; this is normal.

7. Hammer or mallet the Anchor Bolt the rest of the way down into the hole; stop when the Washer is snug against the Base Plate.
8. Plumb each Post; install any required Shims and or the optional Height Adapter Trays.

9. Wrench each Nut ***clockwise*** to the recommended installation torque, 85 to 95 ft. lbs., using a Torque Wrench.

Important: ***Never*** use an impact wrench to torque the Anchor Bolts.

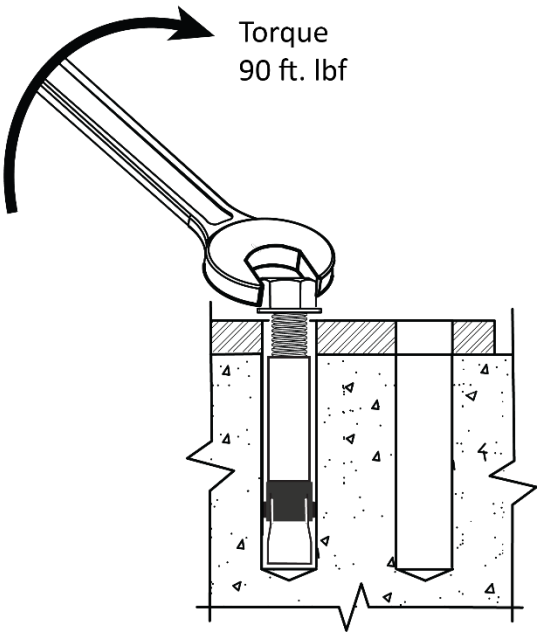

Safety Locks and Safety Lanyards

The AL9LC Lift's Safety system uses Safety Ladders and Safety Stop mechanisms to provide solid gravity-driven positive lock positions for the lift arms: there are 19 of these spaced every 3 in. (76 mm) and as the Lift Arms pass each position, the Safety Stops will make an audible sound as they engage, then rachet past them as you continue lifting. To properly engage on a Safety Lock (as you will read later in Operation) you must then lower the Lift Arms until they fully engage, on BOTH Posts, with the Safety Locks.

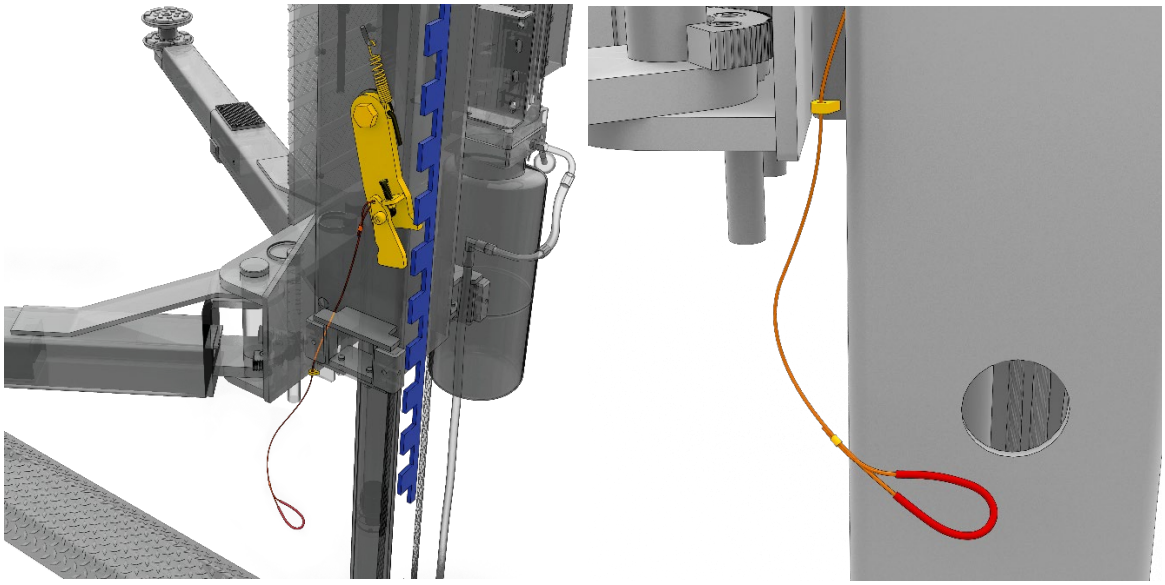

Not to scale. Components removed or ghosted for clarity.

To then release safeties to lower a vehicle, you must raise the Arms, pull both the Safety Lanyards, and then Lower the Vehicle.

The Lift's Safety Lanyards should be ***easily*** reached when working on the lift: they should be properly set up coming from the factory – it's important to check that the Safety Lanyards are passing through the small grommet at the base of the Lift Head and are long enough to be easily reached and pulled when operating the Lift.

⚠ **DANGER** Ensure that ***BOTH*** Safety Locks are released and free before lowering the lift! If only one safety lock is disengaged while the other is still engaged, the vehicle could become unbalanced while lowering and fall off the lift arms. Damage to the Lift and severe injury or death may result.

IMPORTANT! PLEASE READ NOW

Hydraulic Fluid Contamination poses a serious issue for your Lift; contaminants such as water, dirt, or other debris can get into the Hydraulic Hoses and Fittings on the Lift, making your new Lift *inoperable* and *unusable*.

Your Lift is shipped with clean components; however, BendPak strongly recommends that you take secondary precautions and clean all *loose* Hydraulic Hoses and Fittings prior to making connections. It is better and less costly to take these extra steps now so that you do not need to take your Lift out of service later to fix issues that could have been prevented at the time of installation. It is not necessary or recommended to clean out pre-installed fittings or lines.

There are several ways to clean Hydraulic Hoses and Fittings:

- **Compressed Air**. Use an air compressor to blow out contaminants from each Hydraulic Hose and Fitting prior to installation. Clean, dry air is preferred. Wear ANSI-approved eye protection (safety glasses, goggles, or face shield) when using compressed air for cleaning. Never point an air hose nozzle at any part of your body or any other person.
- **Fluid Flushing**. As long as the Hydraulic Fluid is clean and compatible with the system fluid, you can flush Hoses and Fittings to create turbulent flow and remove particulates. Always ensure that the fluid itself is contaminant-free.

Some additional steps that will help keep the Hydraulic Fluid clean:

- **Remove old thread seal tape**. Some ports on the Hydraulic Cylinders are shipped with temporary plugs secured with thread seal tape, so make sure to thoroughly remove any leftover thread seal tape that may inadvertently enter the Hydraulic System.
- **Use a liquid thread sealant only**. Liquid thread sealant (Loctite™ 5452 or similar) is recommended. Do not use thread seal tape on any fitting. Liquid thread sealant is recommended for NPT connections, fine for JIC connections, but is *not* necessary for O-ring (ORB) connections.
- **Always use clean equipment**. If you use a dirty bucket or funnel to transfer the Hydraulic Fluid into the Hydraulic Fluid Reservoir, the contaminants will likely be introduced into the Fluid. When using cleaning rags, use a lint-free rag.
- **Proper storage**. Keep the Hydraulic Fluid sealed in its container until ready for use; store the Fluid in a clean, dry, and cool area.
- **Cover the Hoses and Fittings**. Before installation, *do not* leave the ends of the Fittings exposed; the same applies for the Hydraulic Hoses. As a general rule, keep the Hydraulic Hoses and Fittings capped and in a clean area until ready for use.
- **Filter the new Hydraulic Fluid**. Just because it is new does not mean it is *clean*. Use an offline filtration cart or kidney loop system to make sure the Hydraulic Fluid is clean before being transferred into the Hydraulic Fluid Reservoir (even using a heavy-duty nylon mesh screen is better than trusting what is left at the bottom of the barrel).
- **Avoid mixing different types of Hydraulic Fluid**. If Hydraulic Fluid needs to be replaced, make sure to flush the Hydraulic System of the old Hydraulic Fluid before you add the replacement Fluid; do not mix the two together.

Hydraulic System Safety Warnings

Before applying power to the Hydraulic System note the following Safety Warnings:

⚠ **DANGER** Failure to observe these warnings can result in serious personal injury including, in rare cases, death.

⚠ **DANGER**

The Power Unit is a Hydraulic Pump capable of developing pressures in excess of 5,000 psi (345 BAR). A pressure relief valve is used to set the pressure at the desired level. Tampering with, adjusting, modifying, or removing the relief valve is extremely dangerous and is not permitted. Only trained Hydraulics technicians are permitted to adjust the relief valve, using calibrated hydraulic pressure gauges to ensure the proper pressure setting is achieved.

⚠ **DANGER**

Changes to the output pressure may render the power unit incompatible with pressure limitations of other components in the hydraulic circuit. This may cause catastrophic failure of those components, and could result in property damage, severe personal injury, or death.

⚠ **DANGER** The Hydraulic System can contain high pressure which, if suddenly released, can cause severe injury or death.

⚠ **WARNING** The Hydraulic hoses and connections **must** be inspected before any attempt to raise a Vehicle is made.

⚠ **WARNING** ***Verify*** all Hydraulic Hose connections and fittings, including unused auxiliary port plugs on the Power Unit, the Cylinders and anywhere else in the Hydraulic System are tightened.

⚠ **WARNING** Do **not** attempt to connect or disconnect Hydraulic Hoses while the equipment is loaded or while a Vehicle is on the Lift, or the Hydraulic System is under pressure.

⚠ **WARNING** Keep bare hands away from Hydraulic Fluid; always wear gloves when handling Hydraulic Fluid, Cylinders or Hydraulic Hoses.

⚠ **WARNING** When handling Hydraulic Fluid, always observe the manufacturer's safe handling instructions found in their Material Safety Data Sheet (MSDS).

⚠ **WARNING** **Always** promptly clean any Hydraulic Fluid spills. If a leak is the source of the spill, lockout the Lift to prevent use until the Hydraulic System is repaired.

Hydraulic System

This illustration depicts the AL9LC Hydraulic System, from the Power Unit all the way to the Hydraulic Cylinders.

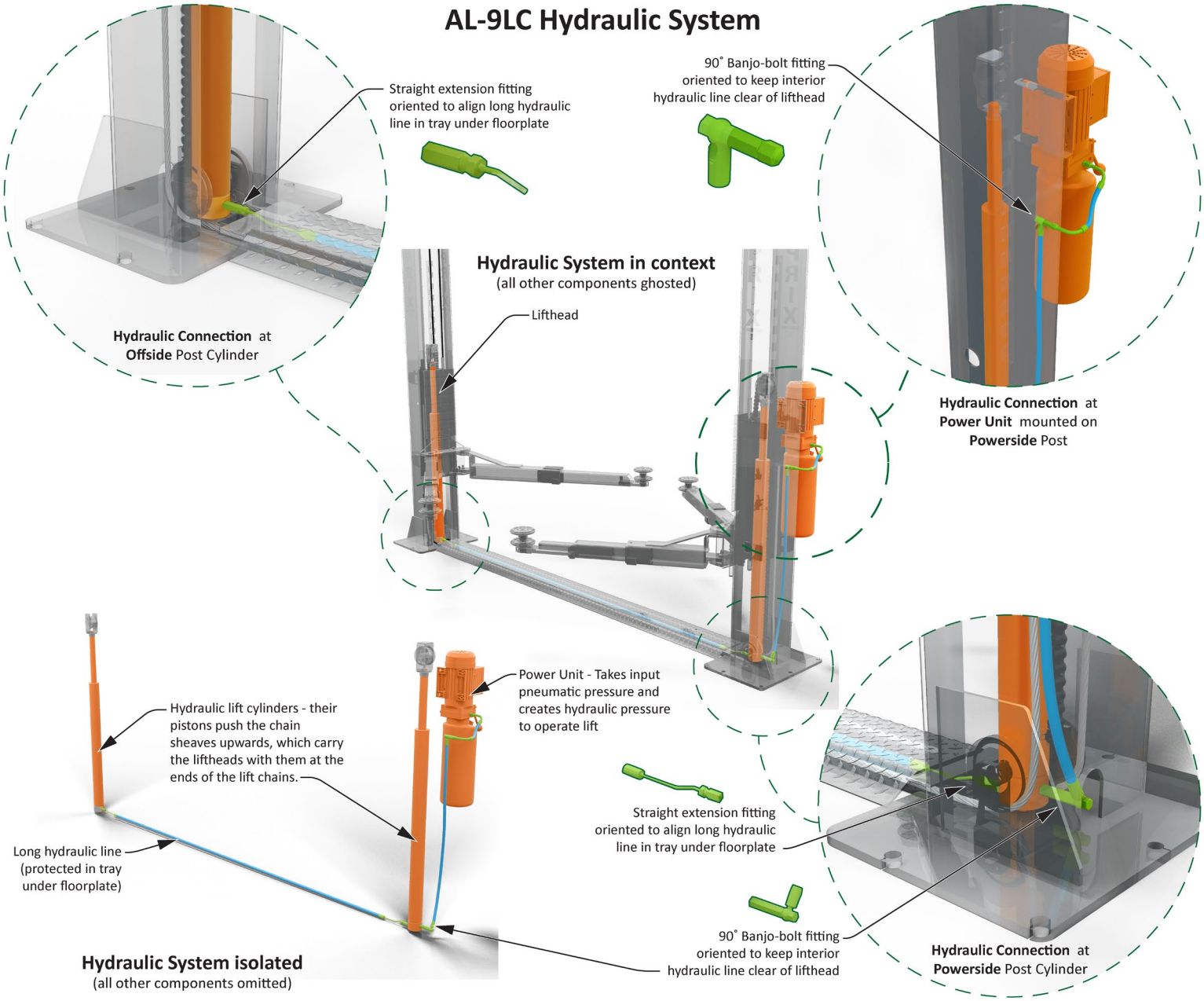

Not to Scale. Components removed or ghosted for clarity.

Hydraulic Connections

Hydraulic Hoses move Hydraulic Fluid to and from the Hydraulic Cylinders at the bottom of each Post. Refer to the next illustration when preparing to connect the Long Hydraulic Hose to the Hydraulic Cylinders on the AL9LC. Installation of the Lift requires the making of four Hydraulic Connections: One at the base of each Cylinder, and the two subsequent connections for the Power Unit.

Tip In all cases, fittings should have their dust caps removed ***just prior*** to connection, to avoid contaminating the Hydraulic System lines.

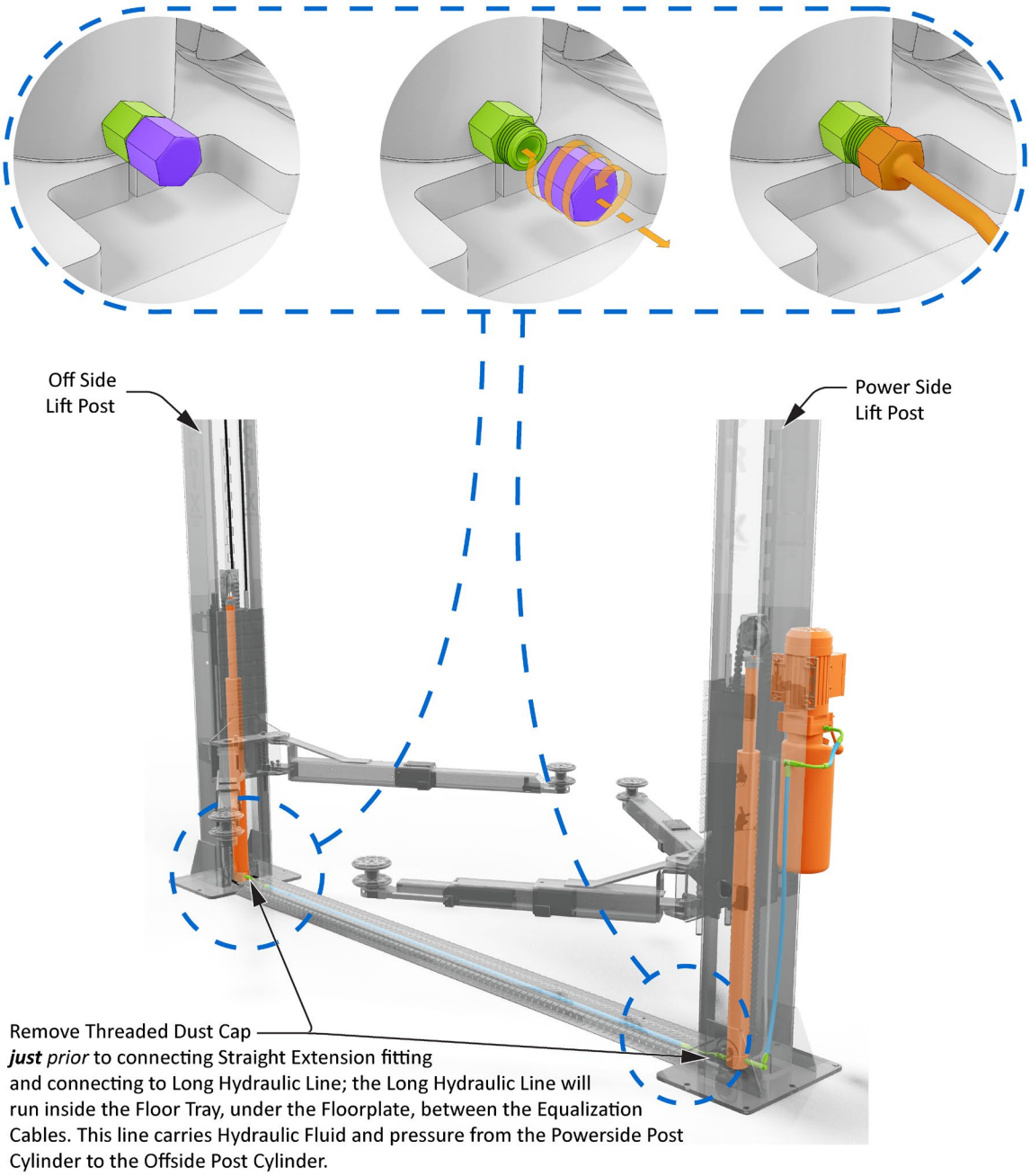

Not to Scale. Components removed or ghosted for clarity.

The hydraulic line which is pre-installed connected to the Power Side cylinder has a Bulkhead Elbow fitting which must be stubbed out – that is, inserted through the hole in the Power side Post, and then secured with a Bulkhead Nut – see illustration.

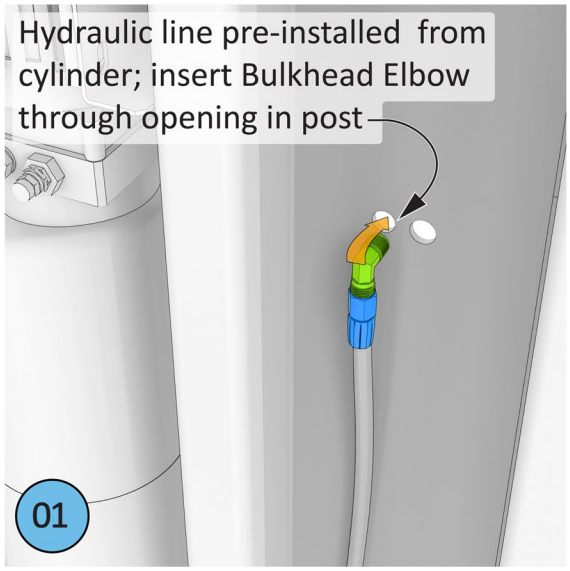

Interior of Power Side Post

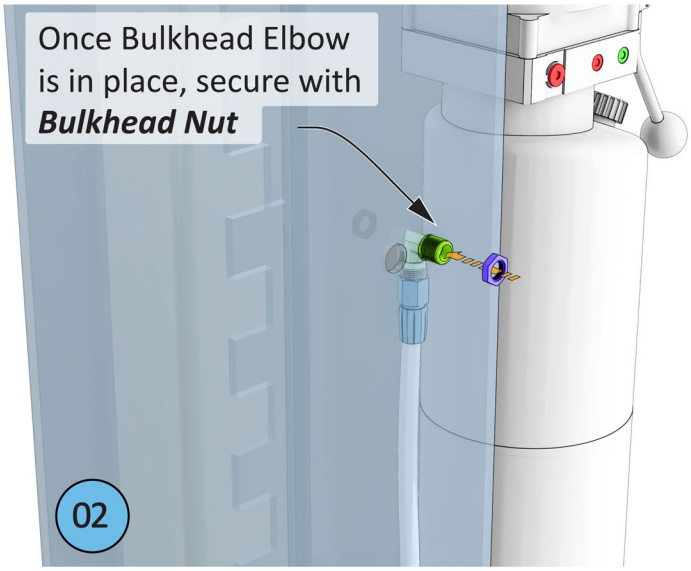

Exterior of Power Side Post

Once this step has been completed, The Power Unit can be mounted and then connected to the Hydraulic System.

Mounting the Power Unit

This section describes how to mount the Power Unit for your Lift. You do ***not*** need an Electrician to ***mount*** the Power Unit, but you *do* need an Electrician to ***connect*** the Power Unit to the facility's electrical service.

Important: Do not connect the Power Unit to the power source at this point in the installation; that connection will be made later.

The Power Unit ***must*** be mounted on the Mounting Bracket on the Power Side Post.

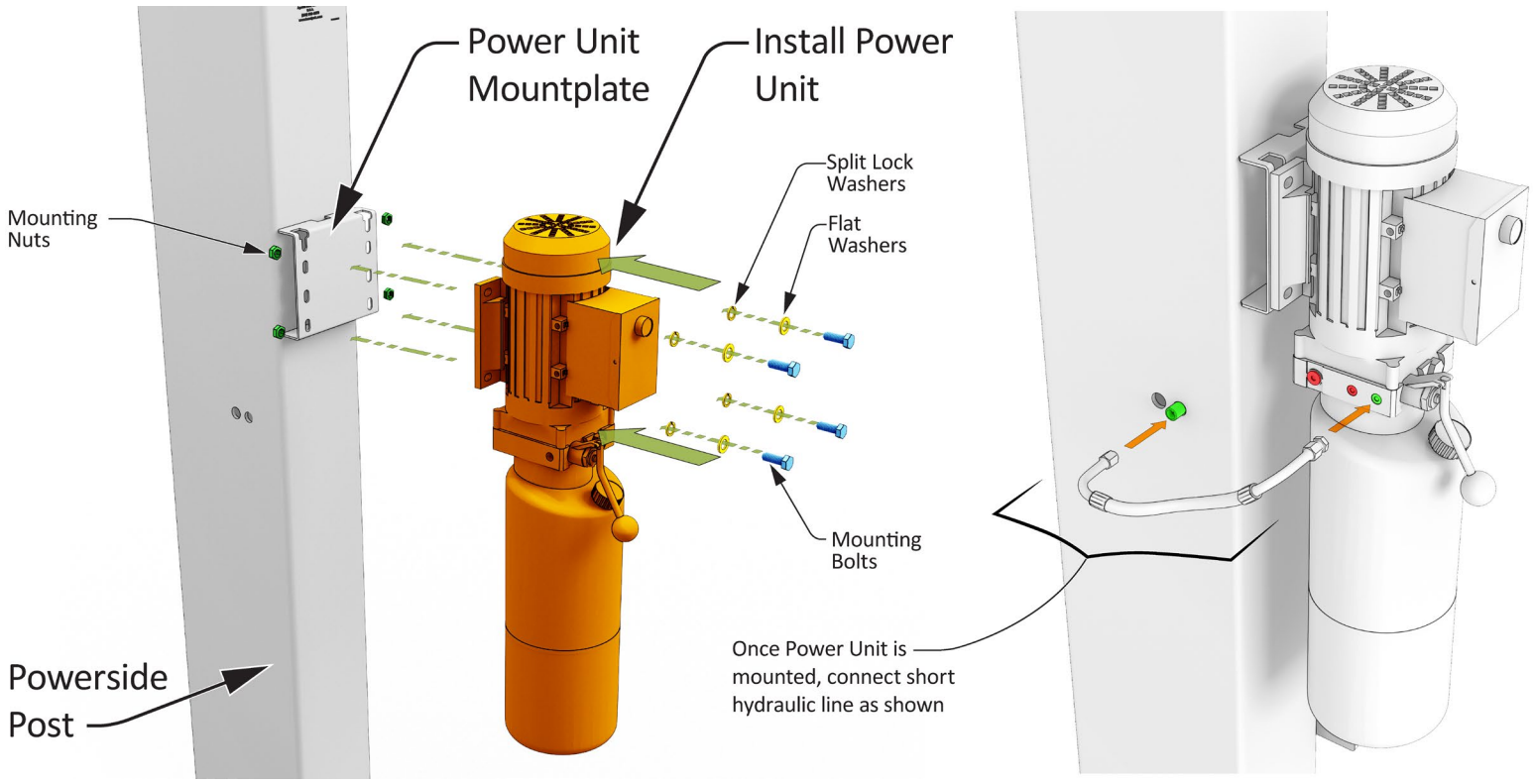

Not to Scale. Components removed or ghosted for clarity.

To mount the Power Unit to the Power Side Post:

1. Find the supplied mounting hardware and the Power Unit.
2. Carefully remove the Power Unit from the shipping material.

⚠ **CAUTION** The Power Unit is heavy. BendPak recommends having one person hold the Power Unit while a second person bolts it into place.

3. Position the Power Unit into place next to the Mounting Bracket on the Power Side Post.
4. Move the Mount Plate on the back of the Power Unit next to the Mounting Bracket.
5. Push one of the Bolts through a hole in the Mount Plate and into the Mounting Bracket; attach a Nut to the thread end of the Bolt, then tighten the Nut.
6. Repeat Step 4 for the other three Bolts and Nuts.

About Arm Restraint Gears

Arm Restraint Gears are mounted at the rear of each Lift Arm, just behind the Arm Head Pin.

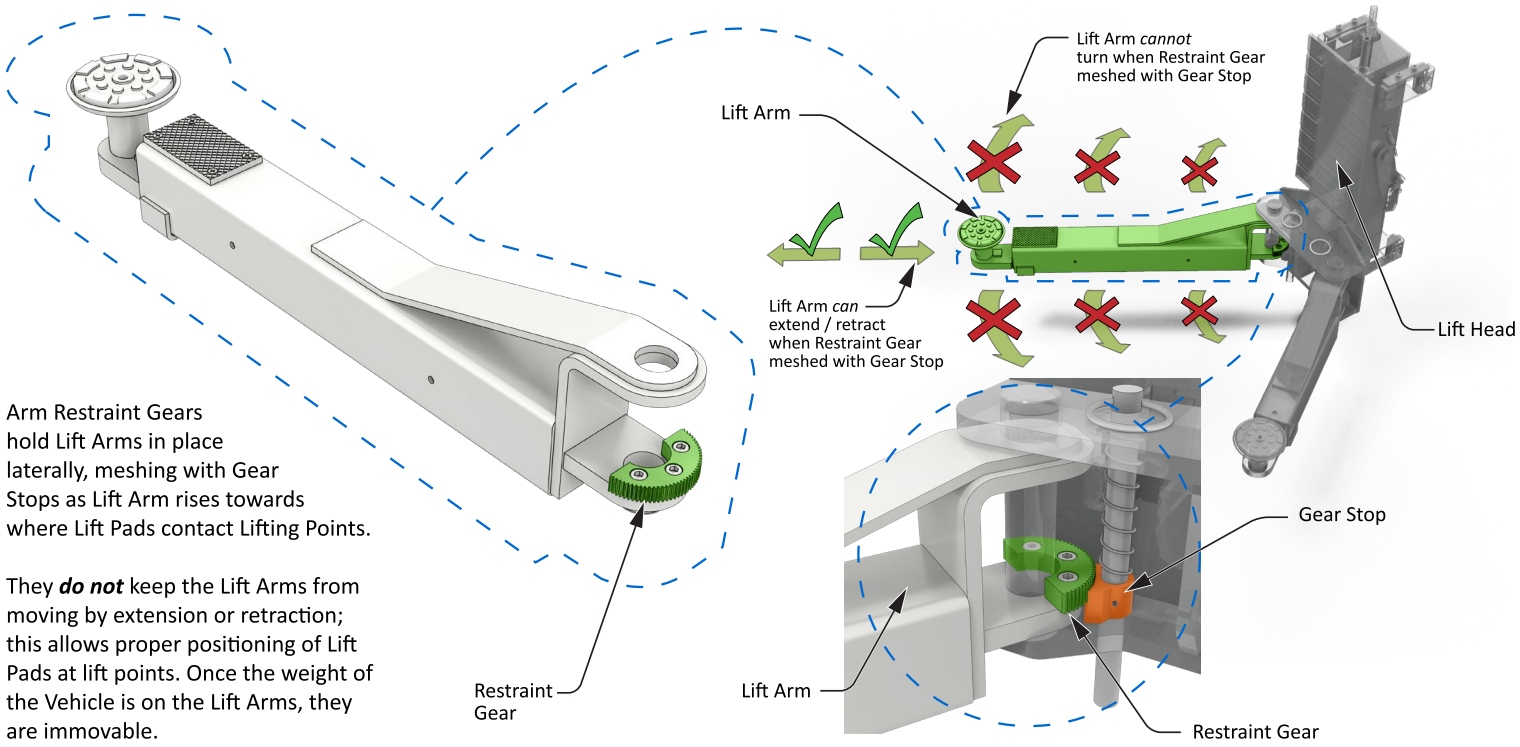

Not to Scale. Components removed or ghosted for clarity.

The Arm Restraint Gears hold the Lift Arms in place laterally, by meshing with the Gear Stops as the Lift Arm rises from the ground towards where the Lift Pads contact the manufacturer's recommended Lifting Points.

When the Lift is fully lowered, the Arm Restraint Gears are ***not*** meshed with the Gear Stops on the Lift Head. This allows easy lateral (angular) movement for the Lift Arms to position them correctly under the Vehicle. When the Lift begins to rise, the Arm Restraint Gears re-mesh with the Gear Stops.

Important: While Arm Restraint Gears prevent unexpected angular motion, they *do not* prevent the Lift Arms from moving by extension or retraction; this allows proper positioning of the Lift Pads at appropriate Lifting Points. Once the weight of the Vehicle is on the Lift Arms, they are largely immovable. Arm Restraint Gears are designed to maintain the position of ***unloaded*** Lift Arms up to 150 lbs. of horizontal (side to side) force. Arm Restraint Gears keep the Lift Arms from moving laterally from just above the ground, when they mesh with the Gear Stops, until the Lift Pads start holding the weight of the Vehicle being raised.

Installing the Lift Arms

The Lift Arms and the Lift Pads attached to them are what contact the Vehicle to raise it off the ground. The AL9LC Lift comes with four Lift Arms.

There are several rules that govern which Lift Arms go where on a particular Lift.

To determine the Front and Rear of the Lift:

- **If a vehicle can only be driven in one way**. The approach side is the Rear of the Lift and the other side is the Front of the Lift. See illustration below.
- **If a vehicle can be driven in either way**. Choose one side as the Front and the other side as the Rear. The best way to make this decision is to pick one approach direction for the Vehicles being lifted, even though they can be driven in either way. Once the decision is made, the approach is at the Front of the Lift, and the other side is the Rear. See illustration below.
- While the Power Unit can only be installed on the Power Side Post, that Post may be mounted on either side of the Lift. The Power Side Post can be identified by the mounting bracket, which the Power Unit attaches to. See illustration below.

Determine whether the Lift Arm is a 'right' or a 'left.' This is determined separately per Post.

To determine right and left, stand between the two Posts, then turn to face one of them straight on. From this viewpoint, the right side of the Post is the 'right' and the left side of the Post is the 'left.'

After finishing the first Post, repeat the process for the second Post.

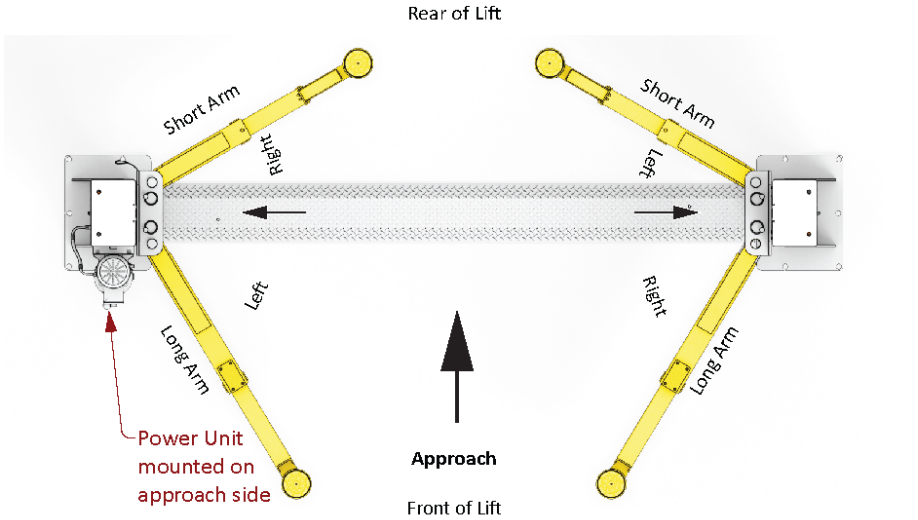

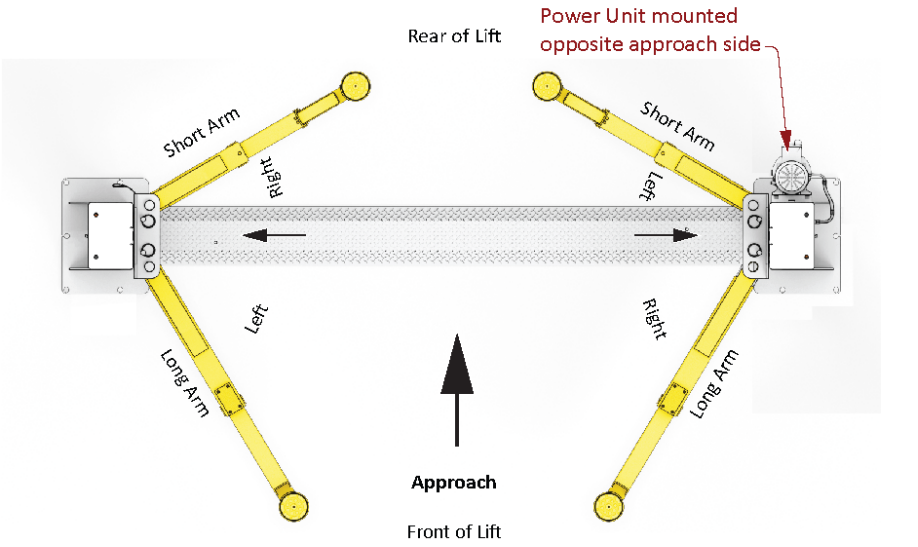

Installing the Lift Arms into the Lift Head Assemblies:

⚠ **WARNING** Verify the Lift Head is securely engaged on a lower Safety Lock and the downward motion of the Lift Head is blocked by a jack stand or equivalent.

⚠ **CAUTION** The Lift Head and Lift Arms are heavy. Use a forklift or shop crane and exercise caution when raising the Lift Head to a lower locking position to avoid injury.

Preparation

1. Retrieve the four Lift Arm Assemblies and Pivot Pins. Position one short and one long Lift Arm Assembly near each Post. Refer to the Installing the Lift Arms discussion for correct placement or Lift Arms in preparation for installation.
2. Using a Forklift or Shop Crane, raise the desired Lift Head to the First Locking Position. Be certain the safety Locks are fully engaged, and that the lift head cannot move during the Lift Arm installation process.

⚠ **DANGER** **Liftheads should be at a Safety Lock Postion.** If Liftheads are not at a lock position, and not properly secured, there is a crushing injury risk, as Liftheads are heavy and can slide unexpectedly. If work is required around a Lifthead, *brace* with a jackstand or assure Safety Lock is correctly engaged at a Safety Position.

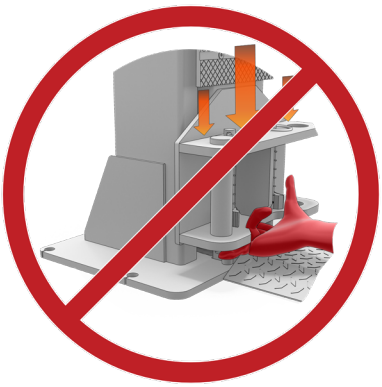

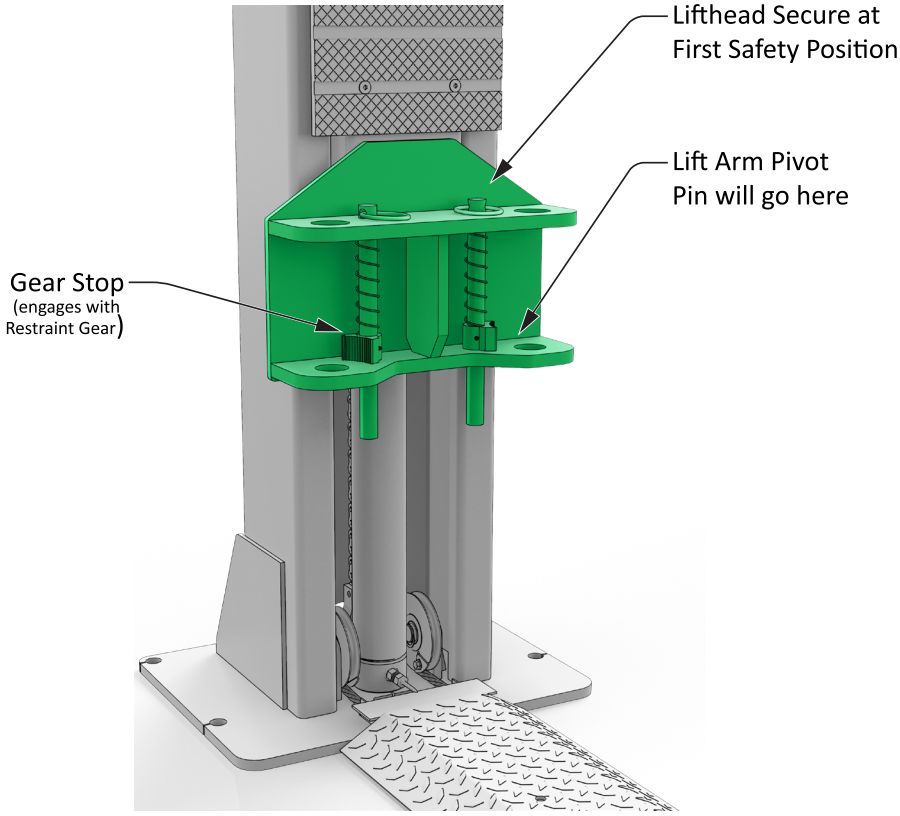

Illustrations not to scale. Some components removed for clarity.

Installation Steps

1. Insert the first Lift Arm into the Lift Head assembly, aligning and meshing the gear on the Lift Arm with the corresponding gear on the Lift Head.

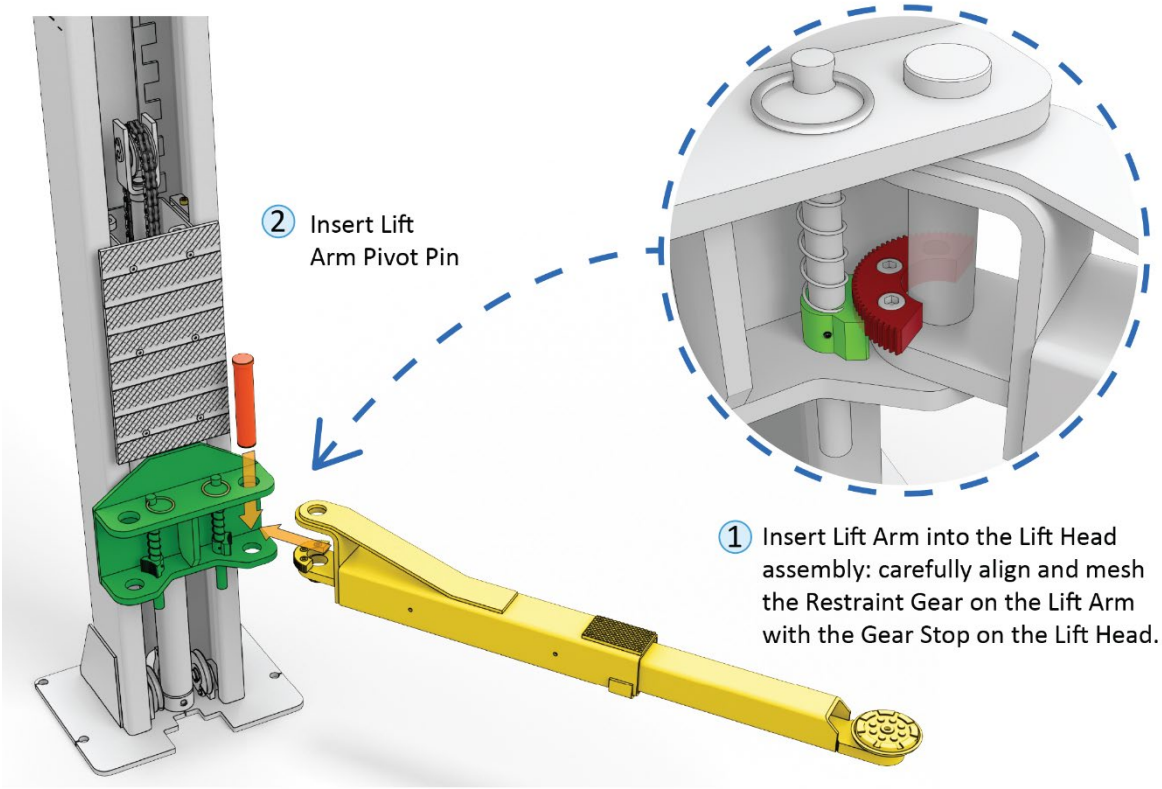

Illustrations not to scale. Some components removed for clarity.

2. Insert the Pivot Pin through both the Lift Head and Lift Arm.
3. Secure the Pivot Pin from the underside of the Lift Arm with the C-clip.
4. Repeat steps 1-4 for the three remaining Lift Arms until all four Lift Arms are securely mounted to the Lift Head Assemblies.

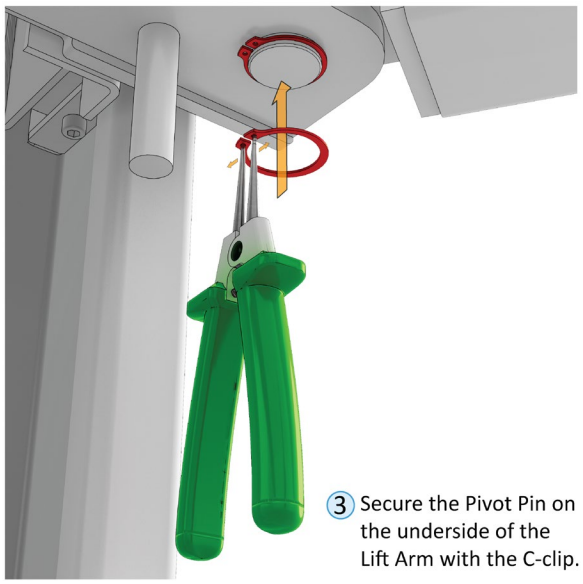

⚠ WARNING Verify that the Arm Restraint Gears and the Gear Stops are meshing and stay in place when up to 150 pounds of lateral force is applied before putting the Lift into normal operation.

⚠ DANGER Each Lift Arm Assembly **must** be inspected and adjusted as required before each use. Do ***not*** operate the Lift if any of the four Lift Arm restraint systems are not functioning correctly. Replace any damaged components with approved replacement parts only.

Contact the Electrician

Following are installation tasks that require a licensed Electrician.

DANGER A licensed Electrician must perform all wiring, in accordance with national and local electrical codes.

The Electrician is required to:

- **Connect to power**. The Power Unit comes with a pigtail for wiring to a power source. Have your Electrician connect a power cord with plug to the electrical box on the Lift (for connection to a power outlet) or have them wire it directly into the electrical system at the Lift location.
- **Connect the Microswitch to the Power Unit**. The Microswitch (which is next to the Safety Shutoff Bar) has to be wired to the Power Unit. The necessary wiring is included.
- **Install a Power Disconnect Switch**. Ensures you can quickly and completely interrupt electrical power to the Lift in the event of an electrical circuit fault, emergency situation, or when equipment is undergoing service or maintenance. You must put it within sight and easy reach of the Lift operator. Refer to **Installing a Power Disconnect Switch** for more information.
- **Install a Thermal Disconnect Switch**. Ensures the equipment shuts down in the event of an overload or an overheated motor. Refer to **Installing a Thermal Disconnect Switch** for more information.

These installation tasks are described in detail in the following sections.

The Electrician is responsible for providing:

- A power cord and appropriate 220 VAC plug for connecting to an appropriate power source or the items required to connect to the facility's power system.
- A UL listed Power Disconnect Switch.
- A Thermal Disconnect Switch, if required by local codes.

Additional information is supplied in the sections describing these tasks.

Electrical Information

DANGER A licensed Electrician must perform all wiring. Do not perform any maintenance until main electrical power has been disconnected from the Lift and cannot be re-energized until all procedures are complete.

Important electrical information:

- Improper electrical installation can damage the Power Unit motor, which is not covered by the warranty.
- The Lift uses electrical energy; if your organization has Lockout/Tagout policies, make sure to implement them after connecting to a power source.
- Use a separate circuit breaker for each Power Unit.
- Protect each circuit with a time delay fuse or appropriate circuit breaker for the power unit in use:
  - 208 to 230 VAC, *single phase* circuit.
  - 208 to 230 VAC, *three phase* circuit.
  - 380 to 440 VAC, *three phase* circuit.

Connecting the Power Unit

The Power Unit must be connected to an appropriate power source.

DANGER A licensed Electrician must perform all wiring in accordance with local and national electrical codes. Do not perform any maintenance or installation on the Lift without first making sure that main electrical power has been disconnected from the Lift and cannot be re-energized until all procedures are complete. The Lift uses electrical energy; if your organization has Lockout/Tagout policies, make sure to implement them after connecting to a power source.

To prepare the Power Unit ready for normal operation:

- Mount the Power Unit to the Power Side Post. Described in **Mounting the Power Unit**.
- Attach the Hydraulic Line to the correct location on the Power Unit. Described in **Routing Hydraulic Lines**.
- Fill the Hydraulic Fluid reservoir. Covered in this section.

Power Units

Your AL9LC Lift is available with one of any of the following types of Power Units:

- **220 VAC, 60 Hz, 1 Phase**. 220 VAC, for North American countries (U.S., Mexico, Canada).
- **208-240 VAC, 50 Hz, 3 Phase**. 3 Phase, multiple voltages available.

110 VAC Power Units are ***not*** available for AL9LC Lifts.

Specialized 3 Phase, Low RPM Power Units are also available on request.

Some Power Units are provided by different vendors so there may be minor differences in look and feel. Nevertheless, all Power Units of the same type provide the same level of functionality.

All Power Units are delivered with a 'pigtail' exiting the electrical junction box. To install your Power Unit, remove the pigtail and connect the Electrical Box to the electrical system at your location or to an appropriate power cord with plug.

The figure at the right is a front view of a typical Power Unit; the power unit delivered may look different depending on what was purchased.

Note: The Up Button shown in figure could be in a different location on the unit or could be a switch instead of a button, depending on the Power Unit you have.

Make clear to your Electrician that all electrical work ***must*** conform to applicable local, state, and federal codes, rules, and regulations.

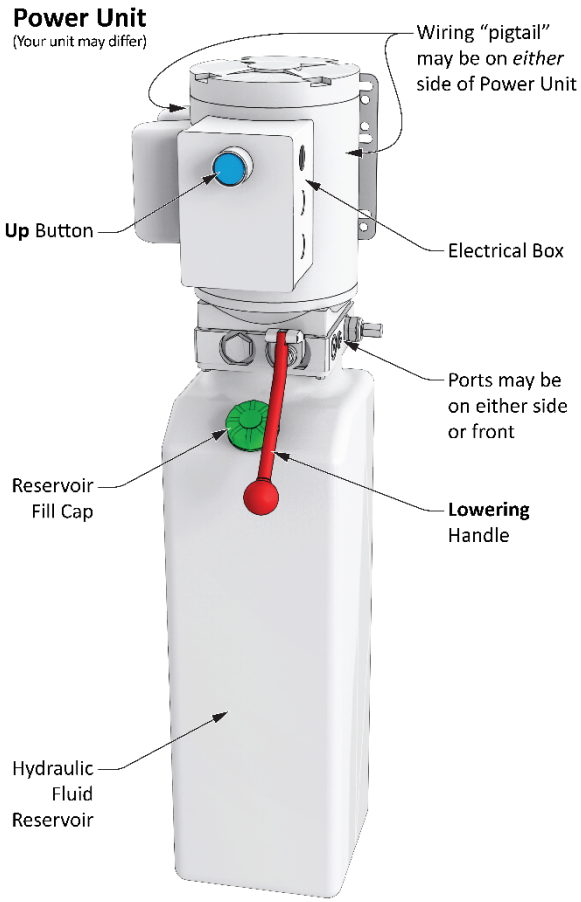

To prepare the Power Unit:

1. Have the Electrician locate the Pigtail exiting the Electrical Box on the Power Unit.
2. Open the Electrical Box, remove the Pigtail, and then either:
   - Wire the Power Unit directly into the facility's electrical system.
   - Wire a power cord (with appropriate plug) *inside the Electrical Box* to the wiring that was connected to the Pigtail.

   Wiring information is either on the outside of the Power Unit under the Electrical Box or inside the cover of the Electrical Box. Have the Electrician use that wiring information to wire the Power Unit to the power source.
3. Fill the Hydraulic Fluid reservoir with approved Hydraulic Fluid.

   The reservoir holds ≈ 3.6 gallons of Hydraulic Fluid, depending on which Power Unit is delivered.

   When you receive the Power Unit, the reservoir is empty; you need to fill it.

   Approved Hydraulic Fluids are any general-purpose ISO-32, ISO-46, or ISO-68 hydraulic oil or approved automatic transmission fluids such as Dexron VI, Mercon V, Mercon LV, Shell Tellus S4 / S3 / S2, or any synthetic multi-vehicle automatic transmission fluid.

⚠ **WARNING** Do not run the Power Unit without Hydraulic Fluid; you will damage it.

Important electrical information:

- Improper electrical installation can damage the Power Unit motor; this damage is ***not*** covered by the warranty.
- Use a separate circuit breaker for each Power Unit.
- Protect each circuit with a time-delay fuse or circuit breaker appropriate for the Power Unit in use.
  - 208-230 VAC three phase circuit.
- The Electrician must connect the Power Disconnect Switch and the Thermal Disconnect Switch if required by local codes.

⚠ **DANGER** **Risk of explosion:** The Power Unit has internal components that may spark and should not be exposed to flammable vapors. This device is not intrinsically safe. Internal Arcing may ignite combustible gases. Never mount the power unit motor lower than 18 in. (≈ 46 cm) above the ground.

⚠ **DANGER** ***Never expose*** the Power Unit motor to rain or other damp environments. Damage to the motor caused by water is ***not*** covered by the warranty.

Installing a Power Disconnect Switch

Refer to Wiring Diagram for wiring details.

⚠ **WARNING** A Power Disconnect Switch is not provided with this equipment.

A Power Disconnect Switch is a National Electrical Code (NEC) requirement. They are designed to interrupt main electrical power in the event of an electrical circuit fault, emergency, or when equipment is undergoing service or maintenance.

Make sure to install a Power Disconnect Switch that is properly rated for the incoming power source.

Your Power Disconnect Switch must be readily accessible and installed so that it is in easy reach of the operator or in their line of sight. The Power Disconnect Switch must be clearly marked to indicate its purpose.

The figure to the right shows a Power Disconnect Switch located between the Lift's power source and its Power Unit. A quick flip of the switch immediately cuts power to the Lift.

Be sure when choosing a location to mount the Power Disconnect switch (and any cable retainers) to *keep all fasteners **completely** out of the Lifthead and slide blocks' paths of travel.*

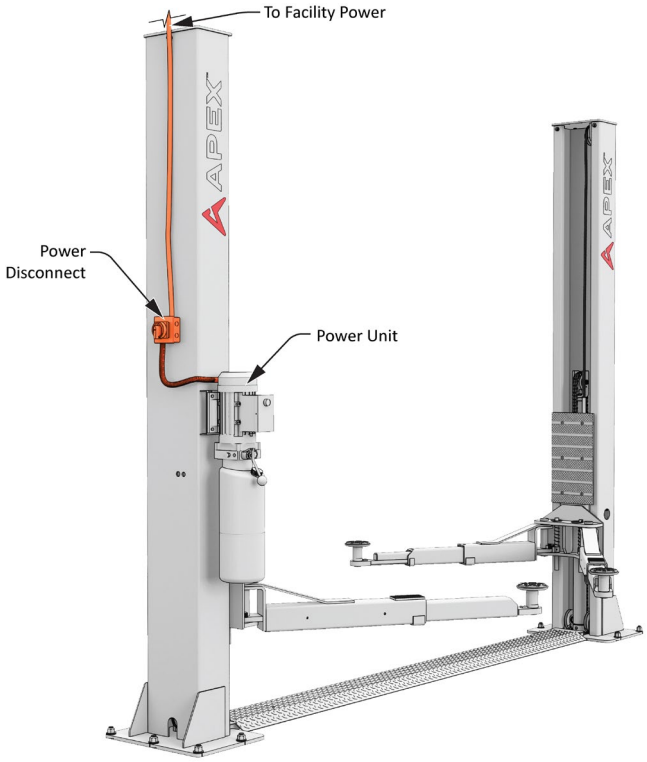

⚠ **DANGER** Installing a Power Disconnect Switch ***must*** be accomplished by a licensed, Electrician.

Have the Electrician select a ***UL-listed*** Power Disconnect Switch.

Installing a Thermal Disconnect Switch

⚠ **WARNING** Your Lift motor has ***no*** thermal overload protection.

The Power Unit supplied with this Lift ***does not*** include thermal overload protection. Under NEC 430, UL 201, and CSA C22.2 No. 68 intermittent duty motors are not required to include thermal protection. Local electrical codes may vary, and other requirements may exist that the installing electrician will address, if required.

⚠ **DANGER** If local Electrical codes require the installation of a Thermal Disconnect, the disconnecting device and the installation ***must*** be provided by a licensed Electrician in accordance with local electrical codes. Do not perform ***any*** maintenance or installation on the Lift without first verifying that main electrical power has been disconnected from the Lift and ***cannot*** be re-energized until all procedures are complete.

BendPak strongly recommends you ***not*** exceed the rated duty cycle of the Lift motor.

Leveling

Before operating your Lift, verify the Lift Posts are perpendicular to the ground and the Lift Arms are level:

- **Lift Posts**: The Posts ***must*** be the same distance apart at the top and at the bottom.

  To make sure the Posts are straight, measure the distance between the posts at one foot off the ground (First move the Lift Arms out of the way) and near the top of the posts. The two measurements (**A** and **B** in the drawing below) must be the same.

  If the Posts are not straight, shim them as required.

⚠ **CAUTION** If the Lift Posts are not straight upright or the Lift Arms are not level, this is a safety risk. The Vehicles placed on the Lift will be less secure; they could fall and cause injuries or damage to the Vehicle or to the Lift.

- **Lift Arms**: When the Lift Posts are straight, verify the Lift Arms are level. To make sure they are level, raise them to the first locking position and put a level on the Pads. This is your baseline.

  Raise the liftheads slightly, still within that same safety lock window, and check your level again.

  Adjust the Equalizing Cables to correct any out of level condition. Determine which Lift Arm is low, then adjust the Nut on the bottom of the Threaded End of the Equalizing Cable until the Lift Arms are level. When you believe the Lift Arms to be level, raise the Lift and listen for the Lift Heads hitting the Safety Locks (there is a distinct thump).

  Engagement sounds should be ***nearly simultaneous.***

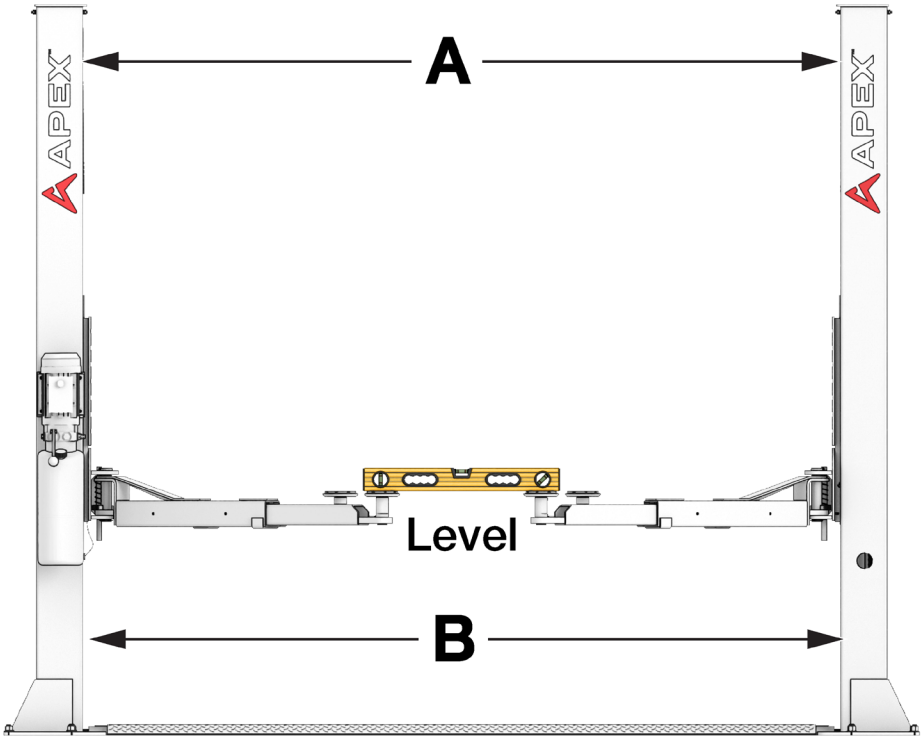

A and B distances must be equal.
If they are not, shim Posts until they are.

Pads must be level.
If they are not, adjust Equalizing Cables until they are.

Adjust Nut up or down to equalize Lift Heads and Pads

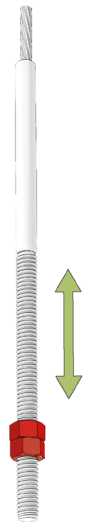

Not to Scale. Components removed or ghosted for clarity.

Perform an Operational Test

Before putting the Lift into normal operation, we recommend raising and lowering it several times with a typical Vehicle on the Lift. This will help you get a feel for how to operate the controls and help get any residual air out of the Hydraulic System (sometimes called “bleeding” the system).

⚠ DANGER Automotive Lifts are dangerous tools when used by inexperienced or impaired technicians. When you even hear the words “automotive lift,” your brain should automatically register the fact that lifting a vehicle is a serious endeavor with life-threatening risks if mandatory lifting precautions are ignored.

During the Operational Test, check for proper installation and operation. Do not raise any additional Vehicles until a thorough Operational Test has been done with a typical Vehicle.

⚠ WARNING ***Never raise a Vehicle whose weight exceeds the rated capacity of the Lift***. Do not leave the controls until the Lift is engaged on its Safety Locks. Only trained personnel should raise or lower the Lift.

To perform an Operational Test:

1. Follow the instructions in **Raising a Vehicle** and **Lowering a Vehicle** to safely raise and lower a Vehicle on the Lift.

⚠ WARNING Be sure to follow the instructions carefully when it comes to contacting the manufacturer’s recommended Lifting Points on the underside of the Vehicle. If you do not, the Vehicle could become unstable and fall, which could damage the Vehicle, damage the Lift, and injure or even kill anyone under the Vehicle.

2. Adjust the Lift Arms under the Vehicle so the Adapters are ***directly under*** the Lifting Points for the Vehicle you are raising.
3. Raise the Lift until ***just before*** the Adapters contact the Lifting Points.
4. Check the Arm Restraint Gears on all four Lift Arms to make sure they are engaged.

   If they are not engaged, move the Lift Arms back and forth until they engage.
5. Raise the Lift until the tires of the Vehicle are a few inches off the ground.
6. Check to verify all four Adapters are making solid contact with the Lifting Points.

   If any of the Adapters are ***not*** making solid contact with the Lifting Points, carefully lower the Lift, and start over again; the Adapters ***must*** make solid contact with the Lifting Points.
7. Raise the Vehicle approximately three feet (one meter) off the ground, then lower it back down.

   Watch and listen as the Lift raises and then lowers. The Lift may move erratically or make some odd noises the first couple of times you use it; this is normal.

Tip Residual air in the Hydraulic System can cause the Lift to shake, move erratically, or squeak; this is normal when you first start using the Lift. It will soon stop doing this, as the Hydraulic System is self-bleeding.

8. Wait for one minute.

NOTICE The Power Unit is **not** a constant duty motor; ***it cannot be run continuously***.

9. Repeat the process, this time raising the Lift, engaging it on a Safety Lock position, taking it off the Safety Lock position by raising it, and then lowering it back down to the ground.

Follow the instructions in **Raising a Vehicle** and **Lowering a Vehicle** to safely raise and lower a Vehicle on the Lift, including engaging it on its Safety Locks.

10. If the Lift is working without shaking, moving erratically, or squeaking, there is no need to repeat the procedure.

    If the Lift is shaking, moving erratically, or squeaking, repeat the procedure one more time.

    If you continue to have issues, refer to **Troubleshooting** for assistance.

11. When the Lift is on the ground and the Vehicle is on all four tires, move the four Lift Arms to their full drive-through positions.

12. Drive the Vehicle out.

Review Final Checklist Before Operation

Make sure these things have been done before putting the Lift into normal operation:

- Review the **Installation Checklist** to make sure all steps have been performed.
- Verify the Power Unit is getting power from the power source.
- Check the Hydraulic Fluid reservoir; it must be full of approved Hydraulic Fluid or automatic transmission fluid. ***You can harm the motor by running it without enough fluid.***
- Check the Hydraulic System for leaks. Verify all Hydraulic Hose connections, Hydraulic Fittings, and Auxiliary Port Plugs on the Lift and Power Unit are tight.
- Verify both Posts are plumb, shimmed, and stable.
- Check to see that all Anchor Bolts are correctly torqued.
- Apply white lithium grease to the inside of the Posts where the Slide Blocks move.
- Make sure both Post top Caps are in place and fastened tightly to the top of both Posts.
- Verify all Cables are properly positioned in their Sheaves.
- Verify all Cable Sheave retaining pins and/or clips are secure.
- Make sure both Safety Lock Assemblies are connected and working normally.
- Make sure that all Safety Locks are clear and free.
- Make sure an Operational Test has been completed.
- Tighten all fittings (even those pre-installed from the factory) to their specified torque (if one is specified) and for all fittings not otherwise specified, tighten till firm and solid.
- Carefully remove the protective film covering the Apex Logos on both posts.

  Deliver the *Installation and Operation Manual* to the owner/user/employer along with the other instructional materials furnished with the lift.

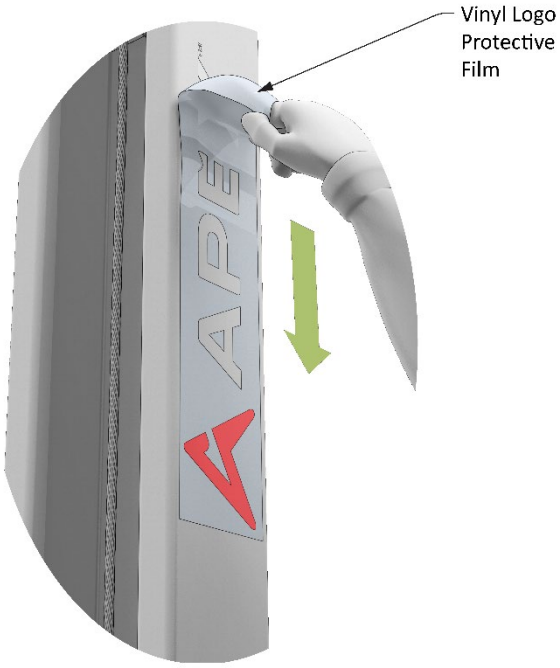

Once Lift is fully set up, and Installation Checklist is complete up to this step, remove Vinyl Logo Protective Film prior to use

Operation

This section describes how to operate the AL9LC Two-Post Lift.

⚠ **DANGER** Automotive Lifts are dangerous tools when used by inexperienced or impaired technicians. Lifting a vehicle is a serious endeavor with life-threatening risks if mandatory lifting precautions are ignored.

Lift Operation Safety Rules

Important: Your safety is dependent on reading, understanding, and implementing these Safety Rules. ***Do not skip over them; read them carefully and follow them!***

Do the following before you raise or lower a Vehicle on your Lift:

- **Check the Lift**. Check the Lift for any missing, heavily worn, or damaged parts. Do not operate the Lift if you find any issues; instead, take it out of service, contact your dealer, email **support@bendpak.com**, or call **(800) 253-2363,** then follow the prompts.
- **Check the area**. Keep the area around the Lift clean and free of obstructions; anything that could cause a problem for the Lift. Do not forget to check ***above*** the Lift. If you find an obstruction, move it out of the way. Do not allow any people or animals within 30 ft. (9.144 m) of the Lift while it is in motion.
- **Check the operators**. Make sure that everyone who is going to operate the Lift has been trained in its use, has read the labels on the unit, and has read the manual. Only the operator should be within 30 ft. (9.144 m) of the Lift when it is in motion. Do not allow children to operate the Lift. Do not allow anyone under the influence of drugs or alcohol to operate the Lift.
- **Check for safety**. Make sure everyone who is going to be walking near the Lift is aware of its presence and takes appropriate safety measures. Only put Vehicles on the Lift Arms. ***When raising a Vehicle on the Lift, do not leave it until it is positioned on Safety Locks***. When lowering the Lift, do not leave it until it is on the ground.
- **Check the Vehicle**. Never exceed the Lift's weight rating. Do not allow people inside a Vehicle you are going to raise. Make sure the Vehicle is not overbalanced on either end. Make sure you know the manufacturer's recommended Lifting Points for the Vehicle. Never raise just one side, one corner, or one end of a Vehicle.

⚠ **WARNING** Always use care when you are around your Lift. When it is in a lowered position, be careful not to trip over it. When it is raised, be careful not to strike your head on the Lift Arms or the Vehicle. ***When you are raising or lowering a Vehicle, keep all people, animals, and objects at least 30 ft. (9.144 m) away from the Lift***.

About Lifting Points, Adapters, and Auxiliary Adapters

An important concern when using a frame-engaging Lift is that the raised Vehicle must be balanced on the four Lift Arms. If the Vehicle is not balanced, it is more likely to become unstable and slide off the Lift, possibly damaging the Lift, the Vehicle, and anything under the Lift, including injuring people.

⚠ **WARNING** You ***must*** use all four Lift Arms when raising a Vehicle. Never use just one, two, or three Lift Arms to raise a Vehicle. The Vehicle will be unstable and could slip off the Lift, possibly damaging the Lift, damaging the Vehicle, and injuring anyone under it.

To balance a Vehicle on a frame-engaging Lift, you need to have the Adapters (also called Pads) contact the Vehicle on the manufacturer's recommended Lifting Points. When you raise a Vehicle by its Lifting Points, the Vehicle is balanced.

NOTICE The manufacturer's recommended Lifting Points do not take into consideration any major changes that might have been made to the Vehicle. If the motor is removed, for instance, or there is a 5,000 lbs. (2,268 kg) weight in the trunk, the Vehicle's Lifting Points will not be the best balancing points.

Some Vehicles have indicators on the underside that identify the Lifting Points; many do not.

Your best approach is to find the Vehicle in the **ALI guide**, *Vehicle Lifting Points for Frame Engaging Lifts* or contact the manufacturer of the Vehicle. This guide also includes a page of safe lifting suggestions, which everyone who uses this Lift should read.

Lifting it Right: A Safety Manual from the Automotive Lift Institute, also available through **ALI**, includes a wide variety of information about Lifts and how to use them safely.

⚠ **DANGER** ***Never*** *place Contact Pads under non-approved, non-load holding Sill Covers or Side Skirts!*

Standard Accessories

The **AL9LC** is *supplied with* four **Screw Lift Pad Assemblies** (5216333) best suited for vehicles with unibody construction; they are height adjustable, up to 3 in (76.2 mm).

In addition, the **AL9LC** is *supplied with* four **63 mm tall Height Adapters** (5210536) for use with SUVs, Vans, Trucks or automobiles with low skirts or rails.

Optional Accessories

Visit **bendpak.com** for additional Adapters and Auxiliary Adapters (also called height adapters or extenders) available adapters currently include the following:

- **SUV and Van Adapters** — Recommended for Trucks, SUVs, and Vans that require additional lifting height.

  63 mm (5210536)

  125 mm (5210535)
- **Replacement Screw Pad Assembly** (5216333)
- **Replacement Lift Pads** (5210511)
- **Replacement Arm Pads** (5210512)
- **Frame Cradles** — Recommended for Trucks, SUVs, and older framed vehicles whose greater weight require lifting from the frame. (5210573)

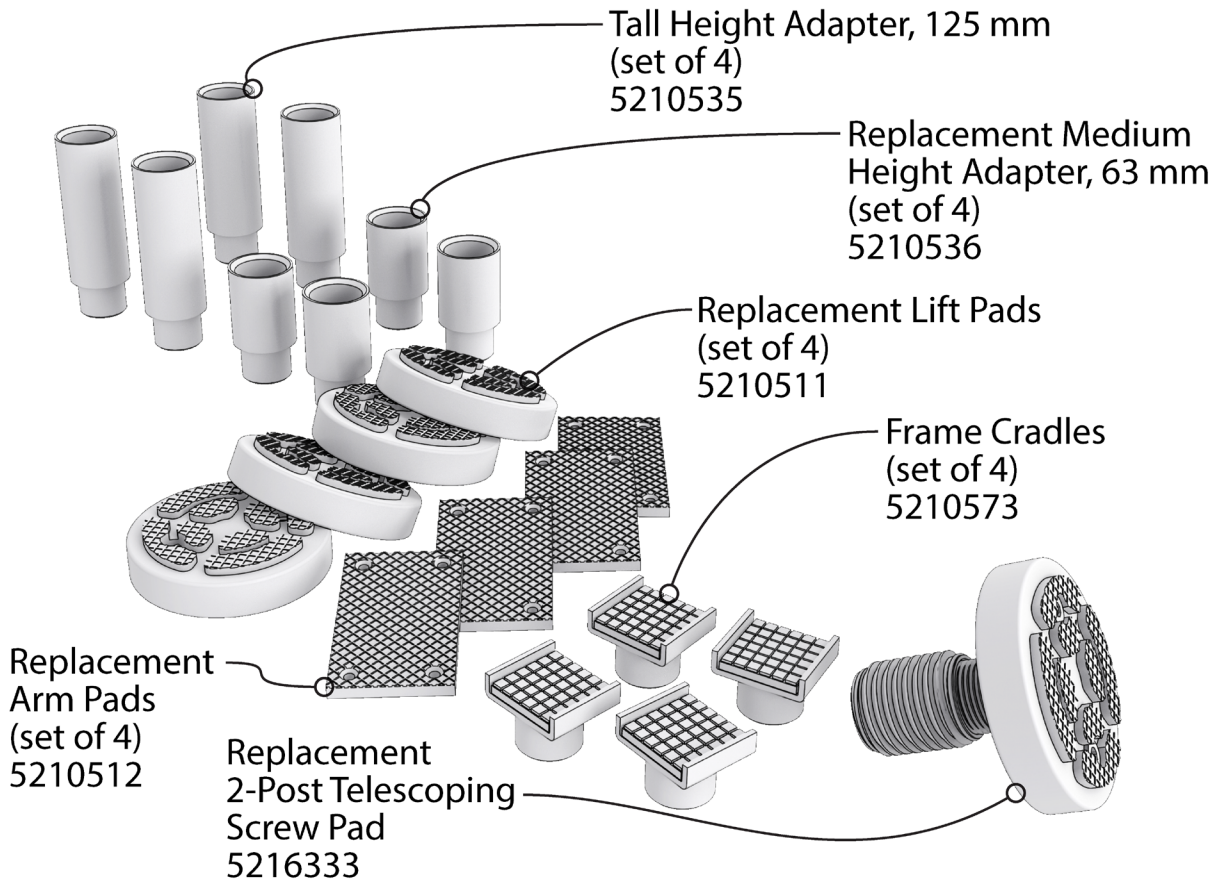

Not to Scale. Components removed or ghosted for clarity.

Accessories available for specific Lifts can and do change: visit **BendPak.com** for up-to-date accessories and replacement Parts information; or call at **(800) 253-2363** the follow prompts. Please have the model and serial number of your Lift available.

Raising a Vehicle

This section describes how to raise a Vehicle on your Lift.

⚠ **WARNING** Never raise a Vehicle whose weight exceeds the rated capacity of the Lift. Do not leave the controls until the Lift is engaged on a Safety Lock position or fully lowered. Only trained personnel should raise and lower the Lift.

To raise a Vehicle on the Lift:

1. Make sure all four Lift Arms are on the ground in their full drive-through positions.
2. Check under the Vehicle you are going to raise, check for the type of vehicle frame, and then put the most appropriate Adapters on the Lift Arms.

   If you are lifting a sedan or a Vehicle with a unibody construction, a Screw Lift Pad is generally the best choice. If you are lifting an SUV, truck, or other Vehicle with a frame construction, an Optional Frame Cradle Pad is generally the best choice.

⚠ **WARNING** Always use the Adapter type best suited for the Vehicle you are raising. If you use the wrong Adapter type, the Vehicle could become unstable.

3. Drive the Vehicle in.

⚠ **CAUTION** When driving a Vehicle into position, keep to the middle of the area between the Posts. If you hit a Lift Arm or any other portion of the Lift, you could damage the Vehicle and/or the Lift.

4. When you are satisfied with the location of the Vehicle, put it in park, put on the parking brake, and turn off the motor.

   If the Vehicle is a manual transmission, put it into first gear before turning off the motor.

5. Get out of the Vehicle; open the doors carefully to avoid banging them on the Lift.
6. Locate the manufacturer's recommended Lifting Points for the Vehicle you are raising.

   If you are unsure where the Lifting Points are, consult Vehicle Lifting Points for Frame Engaging Lifts, which is available through ALI at **www.autolift.org/ali-store/**, or the manufacturer of the Vehicle.

   Some vehicles may have the manufacturers' recommended Service Garage Lift Point locations identified by a triangle mark on the underside of the vehicle, reference SAE J2184- (Current Edition). On some vehicles, specific Lifting Points are indicated by a label located on the driver's side door jamb.

   ⚠ **DANGER** Do not 'eyeball' the best location for the Adapters. ***You must use the manufacturer's recommended Lifting Points***. If you do not, the Vehicle could become unstable and fall, which could damage the Vehicle, damage the Lift, or injure or even kill anyone under the Vehicle.

⚠ **WARNING** Many specialty or modified Vehicles or **Vehicles** with unusually short or long wheelbases cannot be on raised on a Two-Post Frame Engaging Lift. Contact the Vehicle's manufacturer for Lifting or Jacking guidance.

The following illustration shows *typical* lifting points based on Vehicle Frame type.

Typical Lifting Points

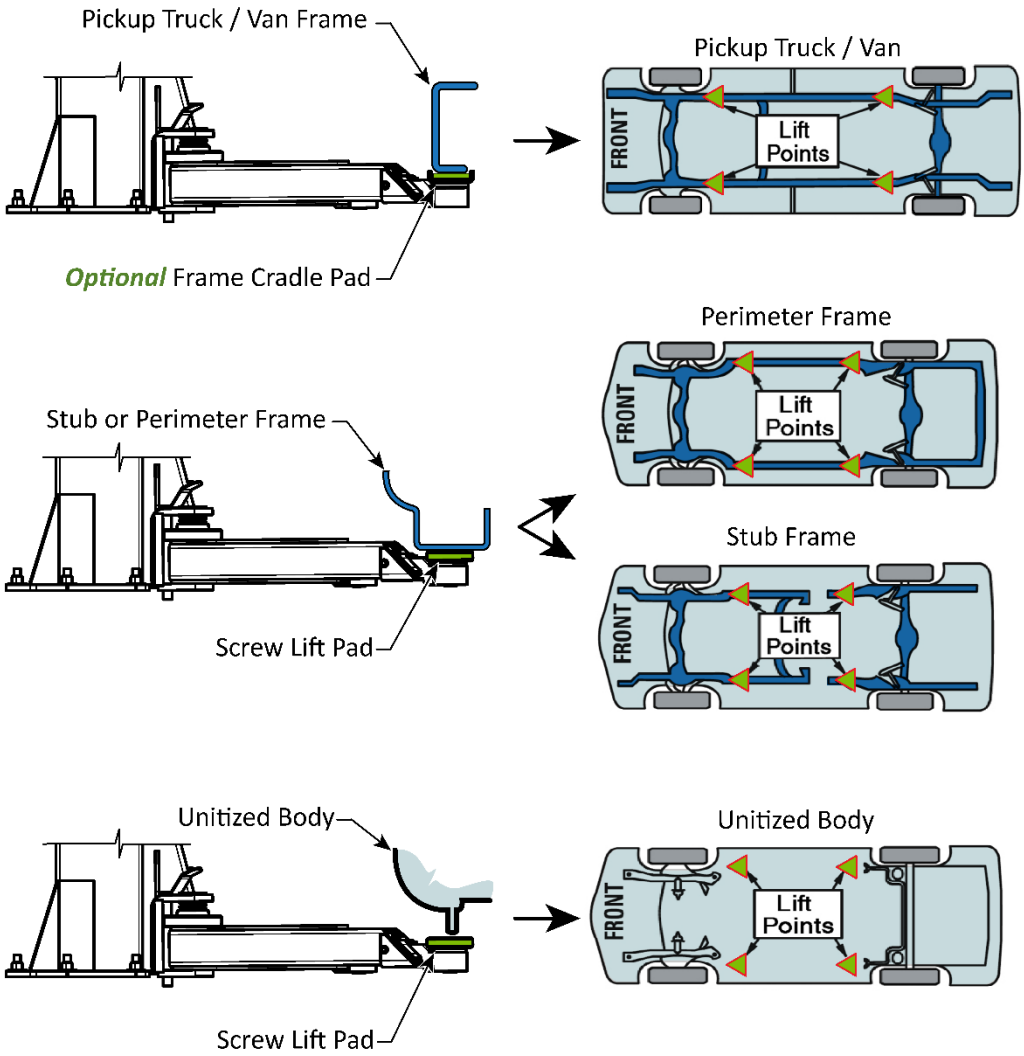

Not to Scale. Components removed or ghosted for clarity.

⚠ **WARNING** ***Before*** attempting to lift a Vehicle verify:

- The Vehicle Frame is strong enough to support its weight and has not been weakened or compromised by modification, damage, or corrosion.
- The Vehicle individual axle weight does not exceed one-half the Lift capacity.
- The Lift Adapters are in secure contact with the Frame at the Vehicle manufacturers' recommended Lift Points.
- The Vehicle is stable on the Lift and the center of gravity is not shifted making the Vehicle off balance.

- Always use Safety Stands when removing or installing heavy components that may affect the vehicle's Center of Gravity.

7. Adjust the Lift Arms under the Vehicle so the Adapters are ***directly under*** the Lifting Points for the Vehicle you are raising.

   If necessary, use optional Auxiliary Adapters for extra height.

8. Raise the Lift until ***just before*** the Adapters contact the Lifting Points.
9. Check the Arm Restraint Gears on all four Lift Arms to make sure they are engaged.

   If they are not engaged, move the Lift Arms back and forth until they engage.

10. Raise the Lift until the tires of the Vehicle are a few inches off the ground.
11. Check to make sure all four Adapters are making solid contact with the Lifting Points.

    If any of the Adapters are ***not*** making solid contact with the Lifting Points, carefully lower the Lift, and start over again; the Adapters ***must*** make solid contact with the Lifting Points.

12. Rock the Vehicle to verify the Vehicle is stable and balanced.

    If the Vehicle is ***not*** stable and balanced, lower the Lift back to the ground and start over.

    If the Vehicle ***is*** stable and balanced, you can raise it to the desired height.

⚠ **DANGER** Do not raise the Lift further until you are certain the Vehicle on the Lift is both stable and balanced. If the Vehicle is ***not*** stable and balanced, it could fall, which could damage the Vehicle, damage the Lift, or injure or kill anyone under the Vehicle.

13. Press and hold the **Up** Button.

    Listen as the Lift passes the Safety Locks; you should hear each side pass by the Safety Locks at approximately the same time.

14. When the Vehicle reaches the desired height, go past the next Safety Lock position (you will hear a distinct sound as it passes), then release the **Up** Button.
15. Press and hold the Lowering Handle, which lowers the Lift onto the Safety Lock you just passed.

    Do not pull the Safety Lanyards; that is for lowering the Lift to the ground.

16. When the Lift stops moving down, it is engaged on its Safety Locks; release the Lowering Handle.

    Do not leave the Lift controls unless the Lift is engaged on its Safety Locks or fully lowered.

17. Recheck the Adapters to verify they are all still making solid contact with the Lifting Points.
18. Make sure the Lift is engaged on the same Safety Lock on both Posts. You do not want the Lift engaged on Safety Locks of two different heights or one Safety Lock engaged but the other not.
19. Begin work on the Vehicle.

⚠ **DANGER** Only leave the Lift fully lowered or engaged on a Safety Lock. Never move or work under a vehicle unless it is stable and resting on a Safety Lock.

To raise Lift:		**To lower Lift:**
1. Press and hold Up Button. 2. When Lift is just past desired height, release Up Button. 3. Press and hold Lowering Handle. *Do not pull on the two Safety Lanyards. If you do, the Lift will continue to lower and will not engage on its Safety Locks.* Lift engages on its Safety Locks and stops moving; release Lowering Handle when Lift stops. *Only leave Lift on Safety Locks or fully lowered.*	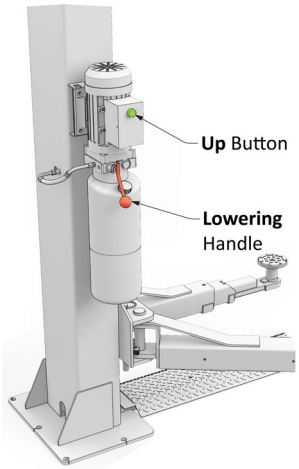	1. Press and hold Up Button for two to three seconds. This moves Lift off its Safety Locks. 2. Pull *both* Safety Lanyards, then push Lowering Handle. Lift begins lowering. 3. When Lift is fully lowered, release Lowering Handle. *Only leave Lift on Safety Locks or fully lowered.*

Lowering a Vehicle

To lower a Vehicle off the Lift, first raise it a small amount to move it off its Safety Locks, then pull both the Safety Lanyards, then push the Lowering Valve on the Power Unit to lower the vehicle. This disengages Safety Locks – see illustration at right.

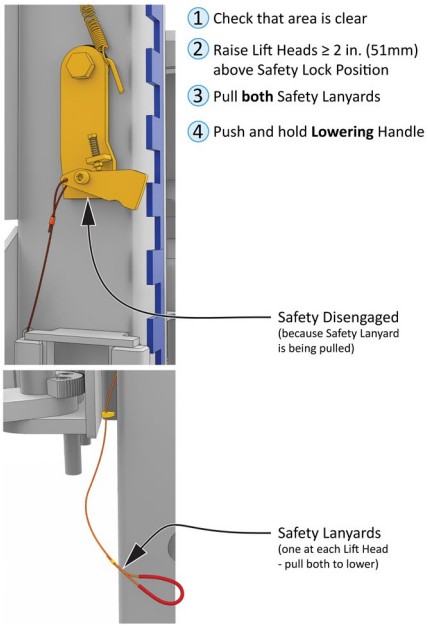

Not to scale.

To lower a Vehicle off the Lift:

1. Check under and around the Vehicle to verify the area is clear of all obstructions.

   If you find any obstructions, move them out of the way.

2. Press and hold the **Up** Button for a second or two to move the Lift off its Safety Locks.

   Raise the Lift *at least 2 in. (51mm) inches* to move clear of the Safety Locks.

3. Pull ***both*** of the Safety Lanyards (these exit the Liftheads through a grommet on the left side).

4. Push and hold the Lowering Valve Handle (on the front of the Power Unit). The Lift begins lowering.

   Important: Pull ***both*** the Safety Lanyards ***before*** using the Lowering Valve Handle to lower the Lift.

   ⚠ **DANGER** Do not override the Lift controls; for safety purposes, they are designed to stop the Lift if released. Overriding the Lift controls *could* lead to damage to the Lift, damage to the Vehicle on the Lift, or injury (even death) to persons near the Lift.

   Remain clear of the Lift as it lowers; obey the pinch point warning decals.

5. When the Lift is on the ground, release the Lowering Handle, then move all four Lift Arms to their full drive-through positions.

6. Drive the Vehicle out when the way is clear.

About Safety Locks

Your Lift has nineteen (19) Safety Lock positions, allowing you to lock the Lift at the best height for what you need to do.

A Safety Lock ***position*** is defined as when the Lift is engaged on both of the Lift's Safety Locks at the same height on both Posts.

Important: *Always* make sure the Safety Locks are engaged *at the* ***same*** *height on* ***both*** Posts. You do ***not*** want the Lift engaged on Safety Locks of two different heights or the Safety Lock on one Post engaged but the Safety Lock on the other Post not engaged.

Safety Lock positions are created by the Safety Locks, which are on the side of each Lift Head. Safety Locks engage the Safety Ladders at each Safety Position, and move past them as the Lift Heads rise.

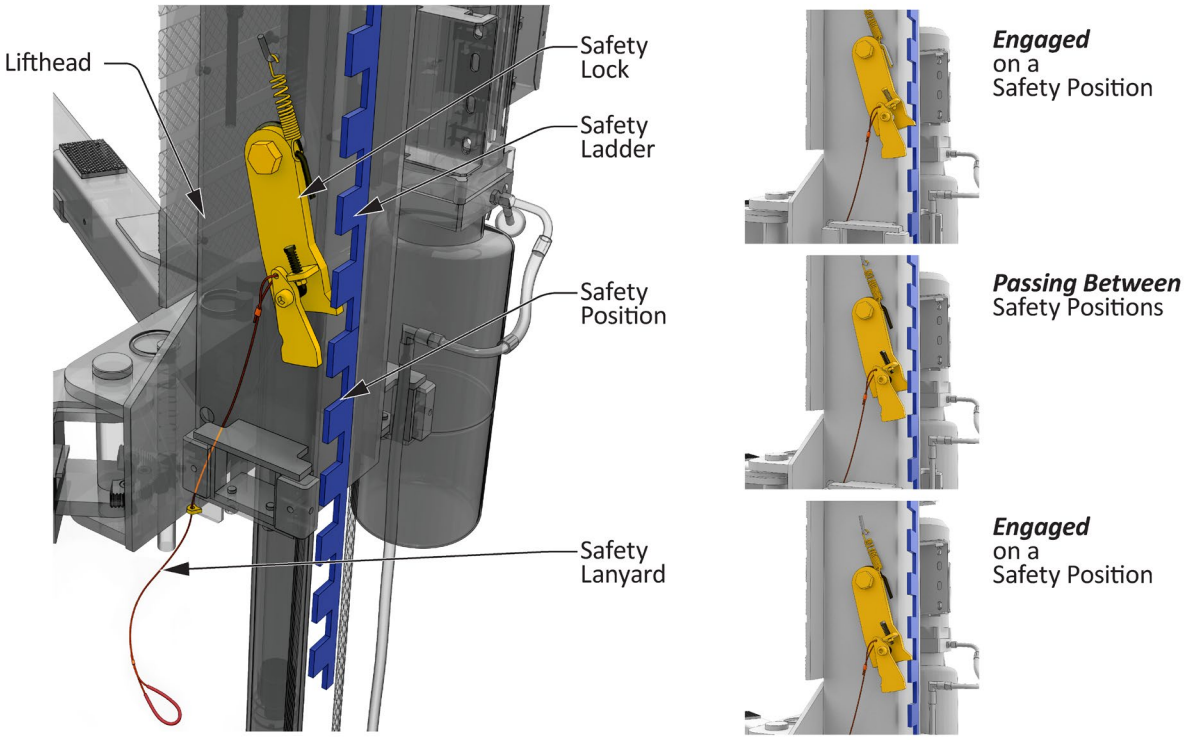

Drawing not to scale. Components removed or ghosted for clarity. Offside Safety Lock not shown.

As they move past the Safety Positions, the Safety Locks rachet, allowing motion along the Safety Ladder to the next Safety Position, where the Safety Locks then spring out to engage that next Safety Position. This happens at each Safety Position passed, so Operators will generally hear multiple clanks as the Lift rises and the Safety Locks rachet and engage.

To engage the Lift on a Safety Position, wait until the Vehicle reaches the desired height for the work you are going to do, then listen for the clank as the Safety Locks pass the next Safety Position. When you hear the Safety Lock clank, release the Up Button, and then hold down the Lowering Valve Handle (on the front of the Power Unit) for a second or two to back the Weldments down onto the just-passed Safety Locks; ***do not*** pull the Safety Lanyards as you do this.

⚠ **WARNING** Only leave the Lift either fully lowered or engaged on Safety Locks. ***If you leave the Lift raised but not engaged on Safety Locks, the Vehicle is not secure***. It could fall, possibly damaging the Vehicle, the Lift, and injuring anyone under the Vehicle.

Maintenance

⚠ DANGER Before performing any maintenance on your Lift, make sure it is completely disconnected from power. The Lift uses electrical energy; if your organization has Lockout/Tagout policies, make sure to implement them before performing any maintenance. If you come into contact with high voltage/current, you could be injured or killed.

⚠ DANGER Do not use the Lift if the cables are damaged or extremely worn. If a Vehicle is raised when you notice the damage or extreme wear, very carefully lower the Vehicle to the ground. When the Lift is on the ground, remove it from service, disconnect it from power, and make arrangements to have it repaired.

⚠ WARNING Do not operate your Lift if you find maintenance issues; instead, remove it from service and correct the maintenance issues. Technical support and service is available from your dealer, on the Web at **bendpak.com/support**, by email at **support@bendpak.com**, or by phone at **(800) 253-2363**, then follow prompts. Online chat is also available at **www.bendpak.com** click the chat icon.

Read the Installation and Operation manual and understand how this equipment operates before using, maintaining, or repairing. Routine maintenance and adjustments are the responsibility of the owner/user and are not covered under warranty.

Routine maintenance and adjustments should be carried out on a regular basis as outlined below. *Unless stated otherwise, all maintenance may be performed by the owner/employer and does not require trained lift service personnel*. Replace worn, damaged or broken parts with original BendPak or BendPak approved parts or with parts that meet or exceed the original specifications.

Maintenance and Lubrication Interval Recommendations:

This lift's service life is dependent on the level and frequency of care and maintenance you provide. By simply following a few guidelines, you can increase the life of your lift by many years. The following care and maintenance procedures not only help to foster that, but also aid by ensuring safe operation and early detection of problems.

Tools required:

- Open End Wrench Set
- Hydraulic Fluid (same type as currently listed)
- Shop Towels
- Screwdrivers
- Hex Key Set

Lubricants:

- White Lithium Multi-Purpose Lubricant
- Red Lithium Grease
- ALMASOL Wire Rope Lubricant or 90W Gear Oil

The following maintenance and interval recommendations are based on typical workday use and operation.

Daily Maintenance

1. Keep the Lift and work area clean, to promote safety and better problem visibility.

2. Visually inspect Safety Locks and Safety Lanyards to confirm good operating condition. Do not use Lift if the Safety Locks or Safety Lanyards are damaged or excessively worn.

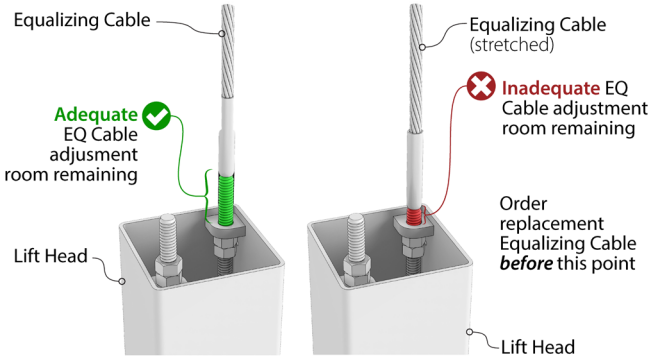

Weekly Maintenance

3. Inspect Equalizing Cables for looseness. Level Lift Arms to check for Equalizing Cable stretch; adjust to compensate; replace *both* Equalizing Cables if there is little room remaining.

⚠ WARNING Always wear proper Personal Protective Equipment when working with hydraulics. Gloves and Safety Glasses are a minimum requirement. Keep your body away from suspected leaks. Use a clean piece of sheet metal (or new paper towel) to rub along hoses and fittings to detect leaks. Shut down the equipment if a leak is suspected.

4. Watch for hydraulic fluid leaks on hoses and hose fittings. Inspect for damage. Hose covers that are cut, cracked, blistered, show signs of abrasion, kinking or flattened are to be replaced.
5. Verify amount of hydraulic fluid in reservoir matches expectations.

Monthly Maintenance

1. Remove, clean, and apply new Red Lithium grease to all Cable Sheave Pins as outlined in the **Lubrication Procedure**.
2. Inspect the condition of all Equalizing Cables and mechanisms. Run a shop towel over the Cable surface while watching for snags. Replace as required.
3. Inspect all hydraulic hoses and fittings for damage and leaks. Approved Hydraulic Fluids are any general-purpose ISO-32, ISO-46, or ISO-68 hydraulic oil or approved automatic transmission fluids such as Dexron VI, Mercon V, Mercon LV, Shell Tellus S4 / S3 / S2, or any synthetic multi-vehicle automatic transmission fluid.
4. Apply 90-WT gear oil or ALMASOL® Wire Rope Lubricant to both Equalizing Cables.
5. Apply White Spray Lithium MP grease to the four inside contact corners of both Posts.
6. Apply White Spray Lithium MP grease to all Lift Arm Pivot Points.
7. Apply Red Lithium grease to all Sheave Pins.
8. Inspect all Lift Arm Pins and locking mechanisms for damage and wear. Replace as required.

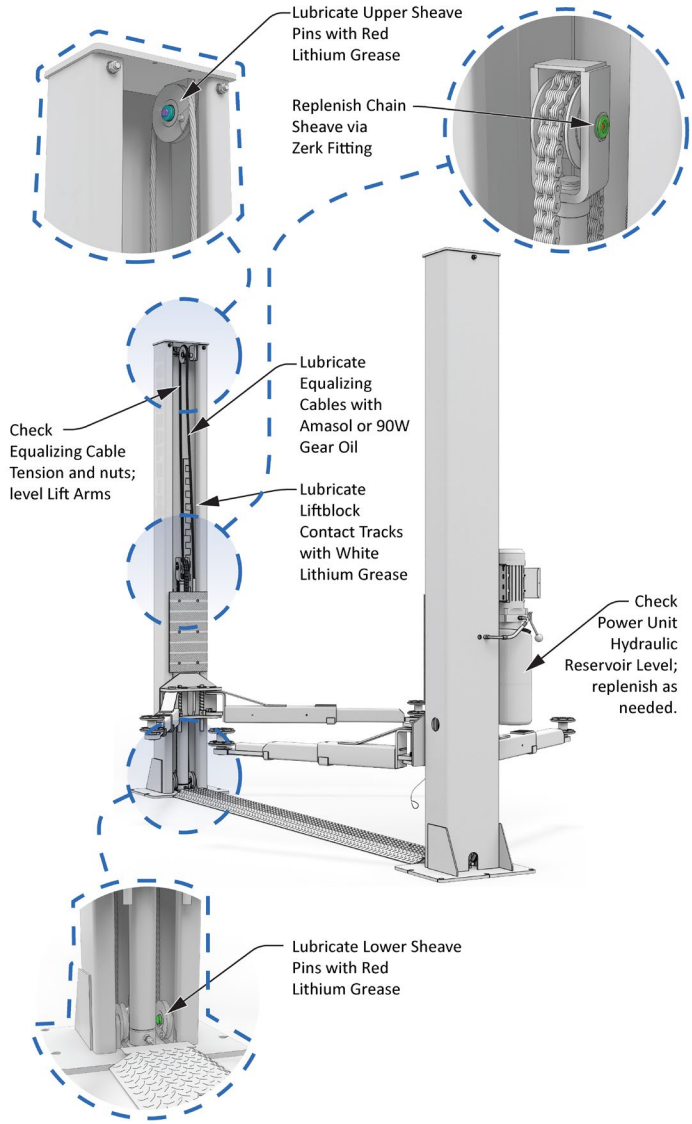

9. Verify all fasteners are torqued to specifications.
10. Verify all Warning labels are in good condition and legible.

Every Two Months

Verify all anchor bolts are secure and torque to 85-95 ft.-lbs.

Every three to five years or sooner as required

1. Carefully check the Equalizing Cables for signs of damage or extreme wear. See **Wire Rope Inspection and Maintenance** for additional information.
2. If the Lift becomes inoperative in a raised position, see the **Troubleshooting** section.

Lubrication Procedure

⚠ **DANGER** Always refer to the lubricant and hydraulic fluid manufacturer's Material Safety Data Sheet (MSDS) for information on the proper handling and disposal of chemicals.

To Lubricate

1. Raise or lower the Lift Head to rest on the first Safety Lock.
2. Remove the Cover from the Lift Head then loosen the Cable Nut to relax the cable.
3. Lubricate the Sheaves.
   a. Remove the screw securing the pin at the sheave.
   b. Remove the Pin from the Sheave.
   c. Apply Red Lithium Grease to the Pin.
   d. Reinstall the Sheave Pin through the Sheave then insert and tighten screw.
   e. Tighten the Cable Nut.
   See Leveling Section to readjust Lift Arms.
4. Lube 4 inside lift head vertical contact tracks (inside posts) with white lithium grease.
5. Lube cables with ALMASOL or 90W gear oil.

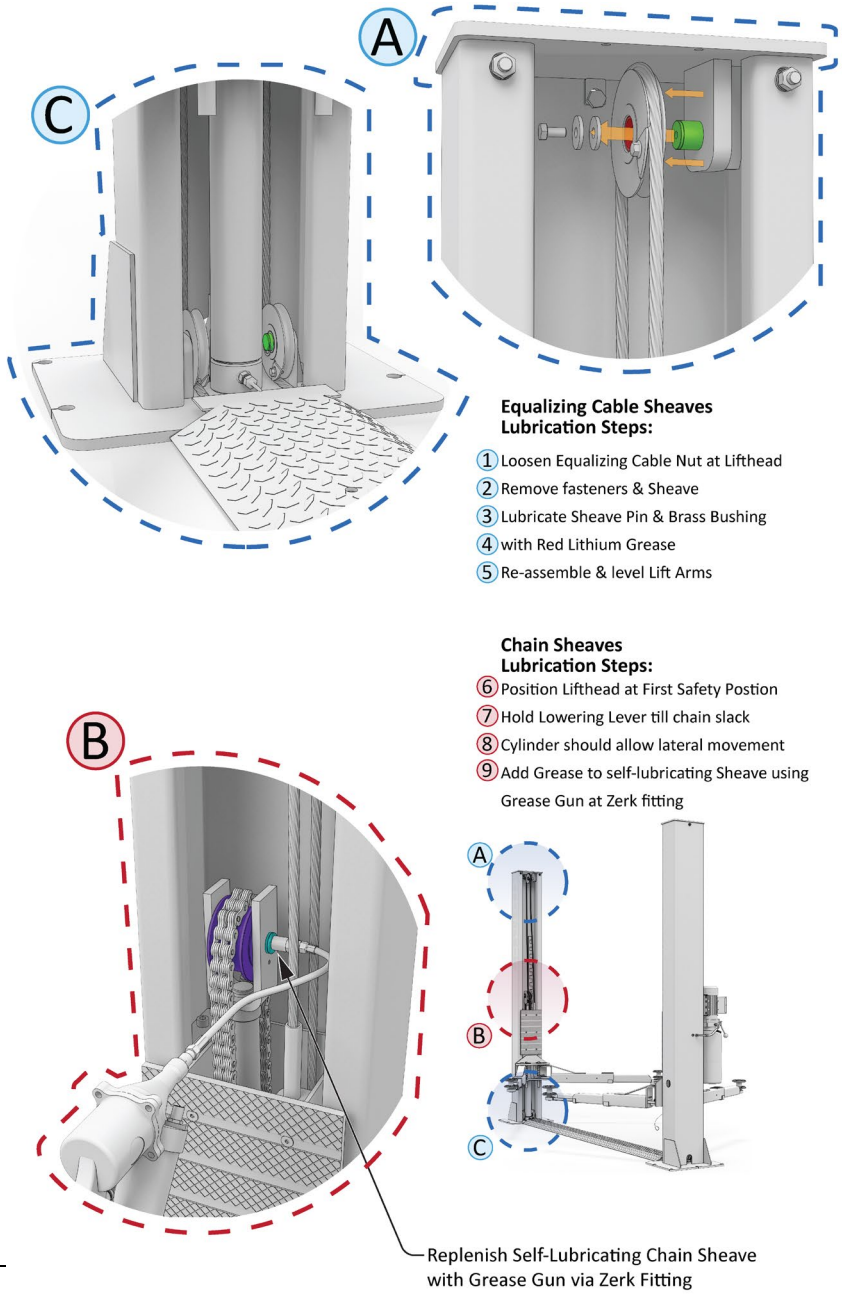

AL9LC Wire Rope Inspection and Maintenance

The AL9LC wire ropes should be inspected regularly:

- Equalizing cables should be replaced when there are visible signs of damage or extreme wear. ***Do not use the Lift if it has damaged or worn cables.***
- Lifting cables should always be maintained in a well-lubricated condition.

  Wire rope is fully protected when each wire strand is lubricated both internally and externally. Excessive wear shortens the life of wire rope. Use a wire-rope lubricant that penetrates to the core of the rope and provides long-term lubrication between each individual strand, such as 90-WT gear oil or ALMASOL® Wire Rope Lubricant.

  To make sure that the inner layers of the rope remain well lubricated, lubrication should be carried out at intervals not exceeding three months during operation.
- All sheaves and guide rollers in contact with the moving rope should be given regular visual checks for surface wear and lubricated to make sure they run freely. This operation should be carried out at appropriate intervals generally not exceeding three months during operation.

  For all sheave axles, use Red Lithium grease. For all sheaves guide rollers (sheave cable-groove), use 90-WT gear oil or a similar heavy lubricant, applied by any method including pump/spray dispensing, brush, hand, or swabbing.
- How often should the Cables be inspected?

  Lifting cables should be visually inspected at least once each day when in use, as suggested by American Petroleum Institute's Recommended Practice 54 guidelines. Any lifting cables that have met the criteria for removal must be immediately replaced.
- When should you replace lifting cables due to broken wires?

  Lifting cables should be removed from service when you see six randomly distributed broken wires within any one lay length, or three broken wires in one strand within one lay length.

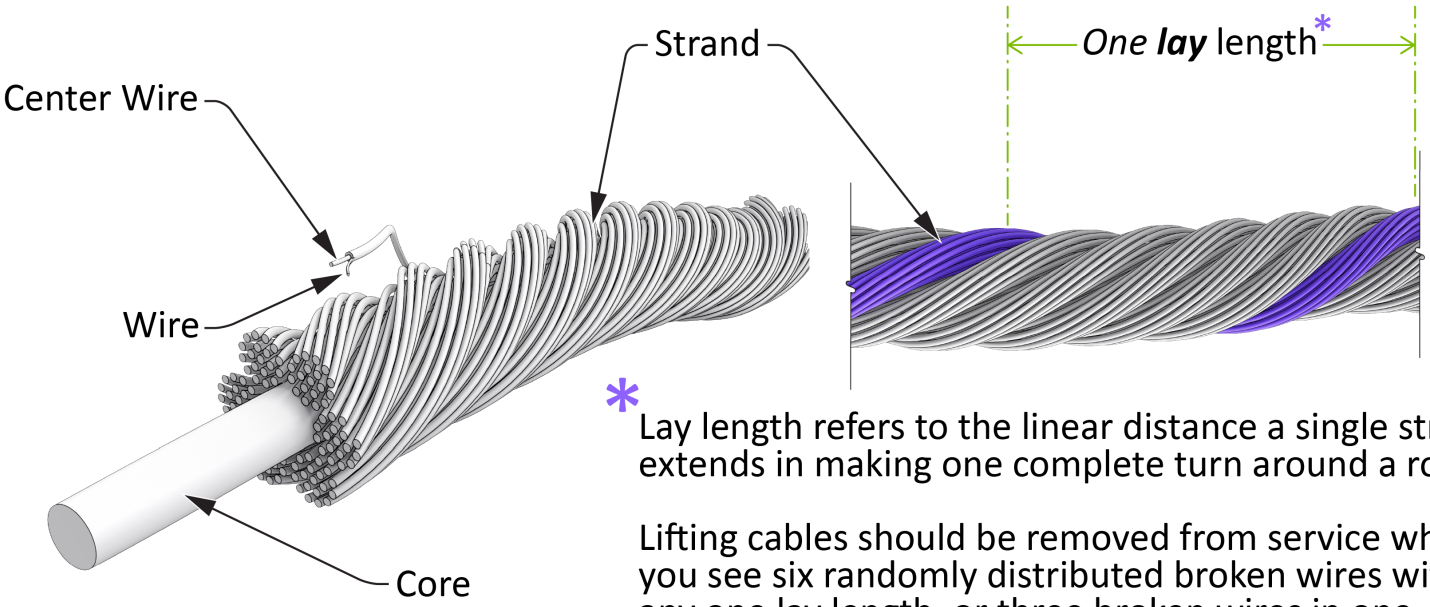

* Lay length refers to the linear distance a single strand extends in making one complete turn around a rope.

Lifting cables should be removed from service when you see six randomly distributed broken wires within any one lay length, or three broken wires in one strand within one lay length.

- Are there other reasons to replace your lifting cables?
  - Yes. Corrosion that pits the wires and/or connectors, evidence of kinking, crushing, cutting, bird-caging, or a popped core, wear that exceeds 10% of a wire's original diameter, or heat damage.
  - Over stretched cables require replacement. All cables stretch. The Lift should be inspected daily and the cables adjusted as required to maintain level lifting. Cables should be replaced well before running out of adjustment at the Lift head

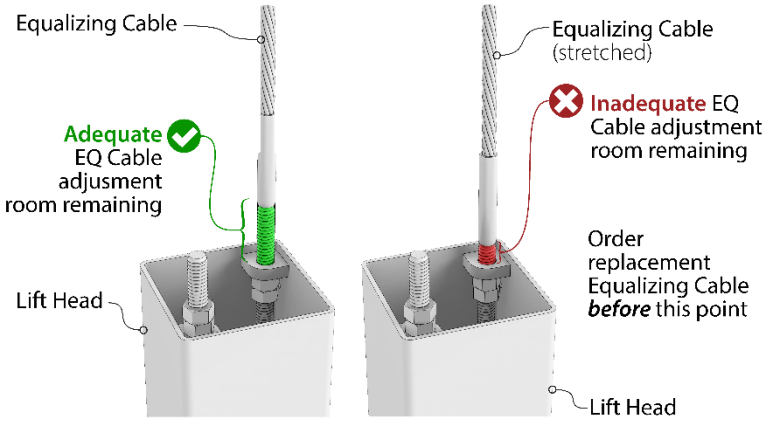

- How do you find broken wires?
  a. Relax your rope to a stationary position and move the pick-up points off the sheaves. Clean the surface of the rope with a cloth — a wire brush, if necessary — so you can see any breaks.
  b. Flex the rope to expose any broken wires hidden in the valleys between the strands.
  c. Visually check for any broken wires. One way to check for crown breaks is to run a cloth along the rope to check for possible snags.
  d. With an awl, probe between wires and strands and lift any wires that appear loose. Evidence of broken internal wires may require a more extensive rope examination.

Wire Rope Issues

(Stop use immediately and order replacements if you see any of these)

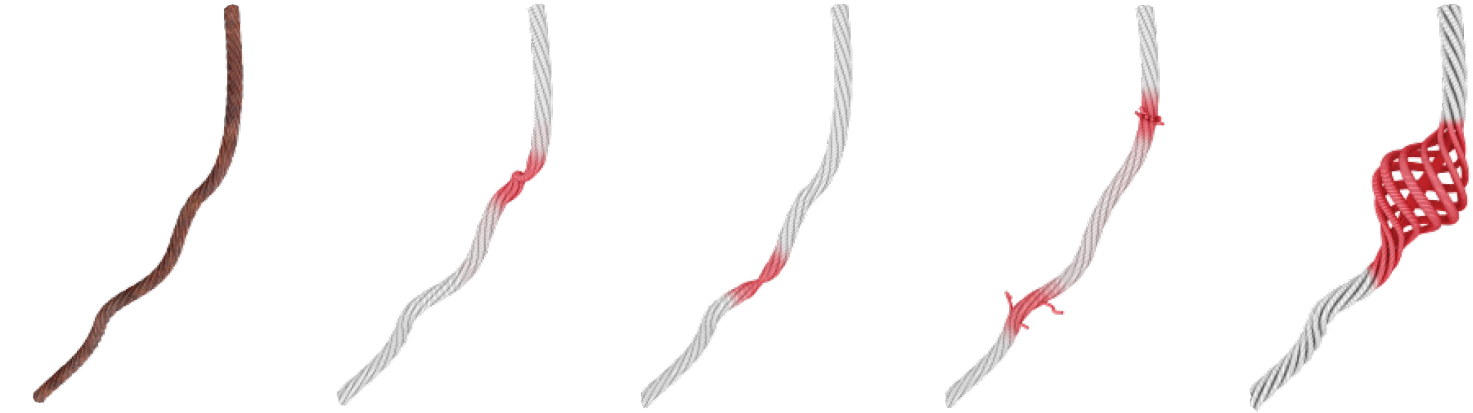

Corroded & Pitted | Kinked | Crushed | Cut / Frayed | Birdcaging

Torque Chart

FASTENER TORQUE CHART

	Bolt Grade (SAE)		SAE Grade 0-1-2			SAE Grade 5			SAE Grade 8			Socket Head Cap Screw SAE Grade	
	Bolt Class (Metric)	4.6	Metric Class 4.6		8.8	Metric Class 8.8		10.9	Metric Class 10.9		12.9	Metric Class 12.9	
Bolt Size (SAE)	Bolt Size (Metric)	Tightening Torque			Tightening Torque			Tightening Torque			Tightening Torque		
		Lubricated (ft-lbs)	Zinc Plated (ft-lbs)	Plain & Dry (ft-lbs)	Lubricated (ft-lbs)	Zinc Plated (ft-lbs)	Plain & Dry (ft-lbs)	Lubricated (ft-lbs)	Zinc Plated (ft-lbs)	Plain & Dry (ft-lbs)	Lubricated (ft-lbs)	Zinc Plated (ft-lbs)	Plain & Dry (ft-lbs)
1/4-20	M6 x1.0	2.3	2.6	3.0	5.8	6.6	7.7	8.3	9.4	11.1	9.7	11.0	13.0
5/16-18	M8 x 1.25	3.8	4.3	5.0	9.7	11.0	13.0	13.9	15.8	18.5	16.3	18.4	21.7
3/8-16	M10 x 1.50	10.8	12.3	14.4	27.9	31.6	37.2	39.9	45.2	53.2	46.7	52.9	62.2
7/16-14	N/A	24.0	27	30.0	35.0	42	50.0	55.0	59	70.0	61.0	68	76.0
1/2-13	M12 x 1.75	18.9	21.4	25.2	48.7	55.1	64.9	69.6	78.9	92.8	81.4	92.2	108.5
9/16-12	M14 x 2.00	30.2	34.2	40.2	77.8	88.1	103.7	111.3	126.1	148.4	130.0	147.4	173.4
5/8-11	M16 x 2.00	47	53	62	121	137	161	173	196	230	202	229	269
3/4-10	M18 x 2.50	65	73	86	167	189	222	239	270	318	279	316	372
7/8-9	M22 x 2.50	136	155	182	320	365	430	460	515	600	510	575	640

WARNING! Prior to Installation, inspect all accompanying manuals, parts lists and catalogs to ensure you have all the necessary parts. Identify all fasteners and their proper torque settings as illustrated on this chart. Proper torquing practices cannot be over emphasized. Torque values are provided as a convenient method of achieving correct pre-loading of highly stressed fasteners. If the fasteners are not properly plated, the fastener threads are not clean and free of deformation, or are not properly lubricated, the correct fastener pre-load will not be achieved even though the given torque value is reached. For this reason, it is critical that all fasteners be inspected for proper plating, thread form and correctly lubricated prior to torquing. Failure to verify a fastener's serviceability or to correctly lubricate the fastener prior to assembly and torquing will result in the fastener not being properly pre-loaded and subsequent failure of the fastener may occur. The torque values can only be achieved if the nut (or tapped hole) has a proof load greater than or equal to the bolt's minimum ultimate tensile strength. Clamp loads estimated as 75% of proof load for specified bolts. Torque values are listed in foot-pounds. Torque wrenches should be calibrated on an annual basis. Never use an impact driver on a torque multiplier.

Troubleshooting

This section describes how to troubleshoot your Lift.

⚠ **CAUTION** If your Lift is not functioning correctly, you must take it out of service until it is fixed. ***Qualified personnel must perform all repair work***.

⚠ **WARNING** The Lift uses electrical energy; if your organization has Lockout/Tagout policies, make sure to implement them before performing any Troubleshooting.

Issue	**Action to Take**
Once raised, Lift does not lower.	Verify there is sufficient Hydraulic Fluid in the reservoir. Make sure there is no air in the Hydraulic System. Make sure none of the Hydraulic Hoses are pinched or leaking. Make sure the Power Unit is getting electrical power. If the Hydraulic Fluid is dirty, replace it with clean fluid. Make sure the Lift is not overloaded. Make sure the load on the Lift is balanced. Contact BendPak Support at **bendpak.com/support**, via email at **support@bendpak.com**, or by phone at **(800) 253-2363** then follow the prompts.
Lift Head and Arms move erratically or squeak when in use.	Move the Lift Head up and down a few times to flush any residual air from the Hydraulic System.
Lift does not stay up.	Make sure to leave the Lift engaged on its Safety Locks. Check for Hydraulic Fluid leaks.
Vehicle on Lift not level.	Make sure Lift is engaged on Safety Locks at the same height. Make sure the Safety Locks in both Posts are engaged. If either condition is not met, carefully lower the Vehicle back down to the ground and raise it again.
Motor not running.	Check connection to power source; make sure it is plugged in and the appropriate voltage. Check wiring diagram on Power Unit.
Hydraulic Fluid is dirty.	Replace the dirty Hydraulic Fluid with clean, approved ATF fluids, such as Dexron VI, Mercon V, Mercon LV, or comparable.
Lift makes odd noises.	Lubricate hinge points using white lithium grease.

If you continue to have issues with your Lift, take the Lift out of service, then contact your dealer or BendPak Support at **bendpak.com/support**, via email at **support@bendpak.com**, or by phone at **(800) 253-2363** then follow prompts.

Disposing of Used Hydraulic Fluid

Used Hydraulic Fluid ***must not*** be disposed of by dropping it into the trash or dumping it into the street. It has toxic ingredients that are harmful to the environment.

Instead, you are required to either recycle it or drop it off at a hazardous waste collection facility.

If you are unable to find an appropriate facility, the website **earth911.com** has resources that may be of help.

⚠ **DANGER** Always refer to the lubricant and hydraulic fluid manufacturer's Material Safety Data Sheet (MSDS) for proper handling and disposal of chemicals.

AL9LC Vehicle Lift Disposal - End of Service Life

Once your Lift has reached the end of its service life it must be disposed of properly. Metal recyclers will be able to advise on methods and costs to remove the Lift and will *reuse* the materials, diverting them from landfills. The best option is to contact a metal recycling center and discuss the size and weight of the Lift to determine if the facility can deconstruct and recover the usable components and metals.

The Hydraulic Cylinders, Hoses, Fittings, and the Power Unit itself must be disposed of in accordance with current national, state, and local regulations governing the use and disposal of hazardous materials. These components and any used Hydraulic Fluid ***must not*** be disposed of by dropping it into the trash or dumping it into the street. The Hydraulic Fluid contains toxic ingredients that are harmful to the environment.

These components and the Hydraulic Fluid are required to be recycled or must be delivered to a hazardous waste collection facility.

If you have large amounts of Hydraulic Fluid, consider contacting a commercial waste disposal company. In all cases, the best approach is to find an appropriate facility and contact them — in advance — to ask them: what kinds of fluids and materials they accept, what kind of containers it must be in, what hours they are open, their location, and any other information specific to their facility.

If you are unable to find an appropriate facility, the website **earth911.com** has resources that may be of help.

Wiring Diagrams

AL-9LC Power Unit
5585148
208-230VAC,
60Hz., 1 Ph., 23Amps

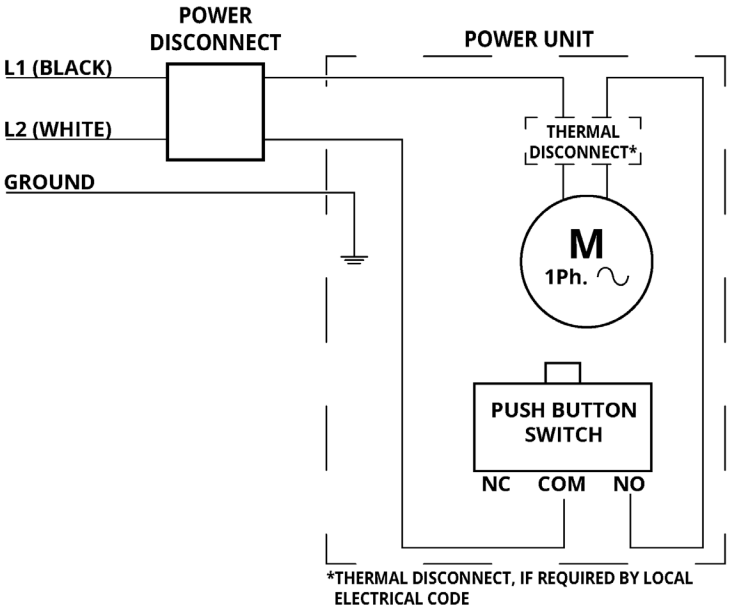

AL9-LC Power Unit
5585149
220-240VAC,
50Hz., 3 Ph., 21Amps

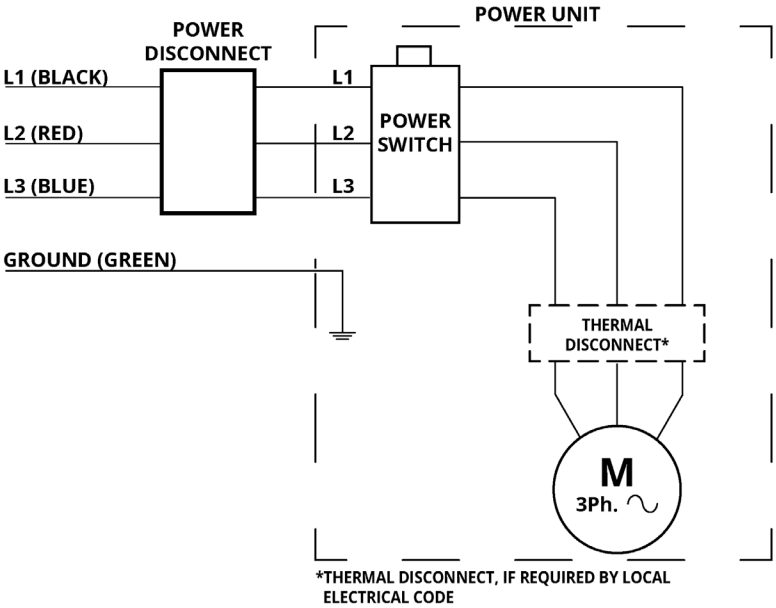

Labels

A — 4 Total — PN 5900421

Apex Primary Logo_Vinyl_Die_RED
Size: 4.64"W x 22"H

B — PN 5905940

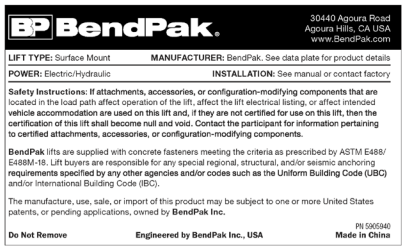

Product_Data_Label_5905940-REV_02-24
Size: 4.5"W x 2.75"H

C — PN 5905650

NRTL_Lifting_Cap_Label_9K_ENG-FRE-5905650
Size: 4.5"W x 3.25"H

NOTE: GRAY DOES NOT PRINT

E — PN 5906166

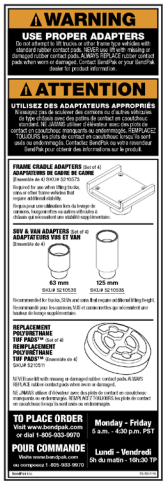

Grandprix_2-Post_New_Series_Adapters_Label_ENG-FRE-5906166
Size: 4"W x 12"H

D — PN 5906167

Grandprix_New_Series_2-Post_Safety_Label-5906167
Size: 4"W x 32.25"H

F — PN 5905402

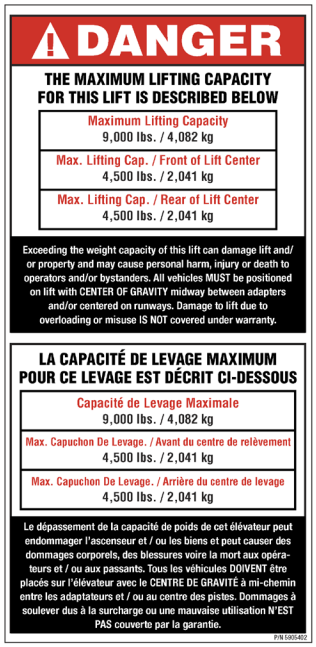

Max._Cap._Danger_9K_ENG-FRE_5905402
Size: 4"W x 8.25"H

G — PN 5906156

BendPak_3x3-Nameplate_Label_A_5906156
Size: 3"W x 3"H

H

Order ALL these labels from ALI

ALI Blue

PN 5905109
(Kit includes Blue, Yellow & Orange Labels)

ALI Yellow

ALI Orange

Order ALL these labels from ALI

I

PN 5906163

NOTE: GRAY DOES NOT PRINT

NOTE: DIE-CUT TO SHAPE

American_Owned_60_Years_Decal
5906163

Trim: 4"W x 3"H

J

PN 5905775

Prop_65_Label-5905775

Size: 1.5"W x 1.5"H

Material: 4 Mil. Permanent White Adhesive Vinyl

Thickness: 4 Mil

Ink: U.V. protected CMYK 2/C Process

Finish: Matte Overlaminate (No gloss)

Print Process: Offset Lithography - 200 line-screen or 300 p.p.i. for digital

Lamination: Clear laminate non-glare medium matte over-laminate (No gloss) for abrasion, chemical and ultra violet protection.

Machine Powdercoat Colors

RAL 7021 (20% Gloss)	RAL 1018 (20% Gloss)

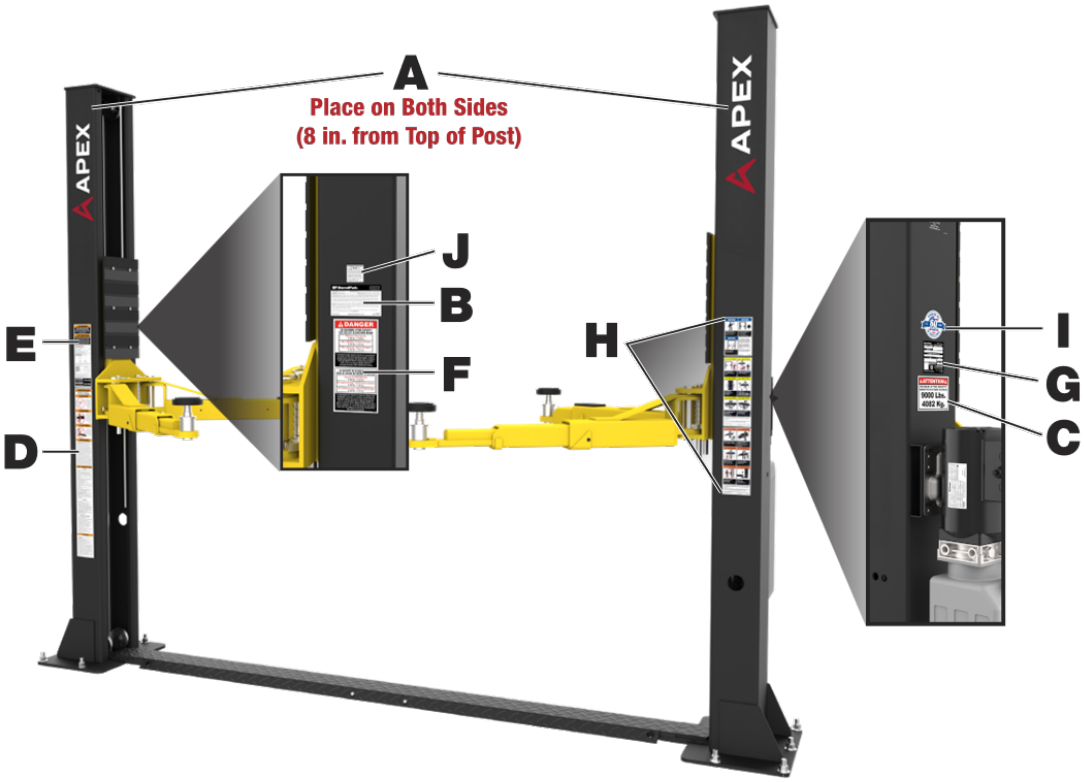

Parts

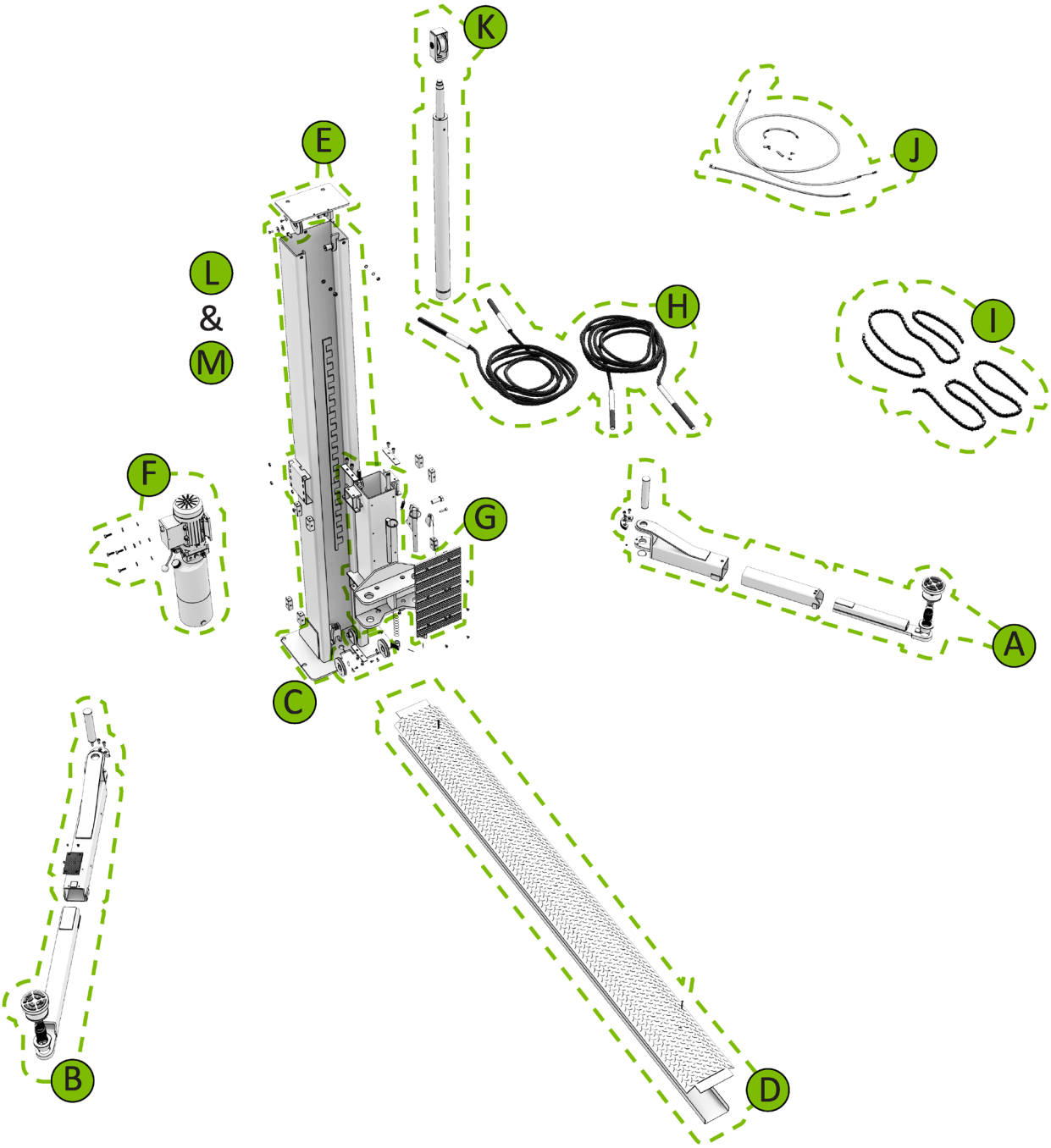

AL9LC Exploded Parts Overview / Key Drawing

See detailed drawing keyed by letter for more detail

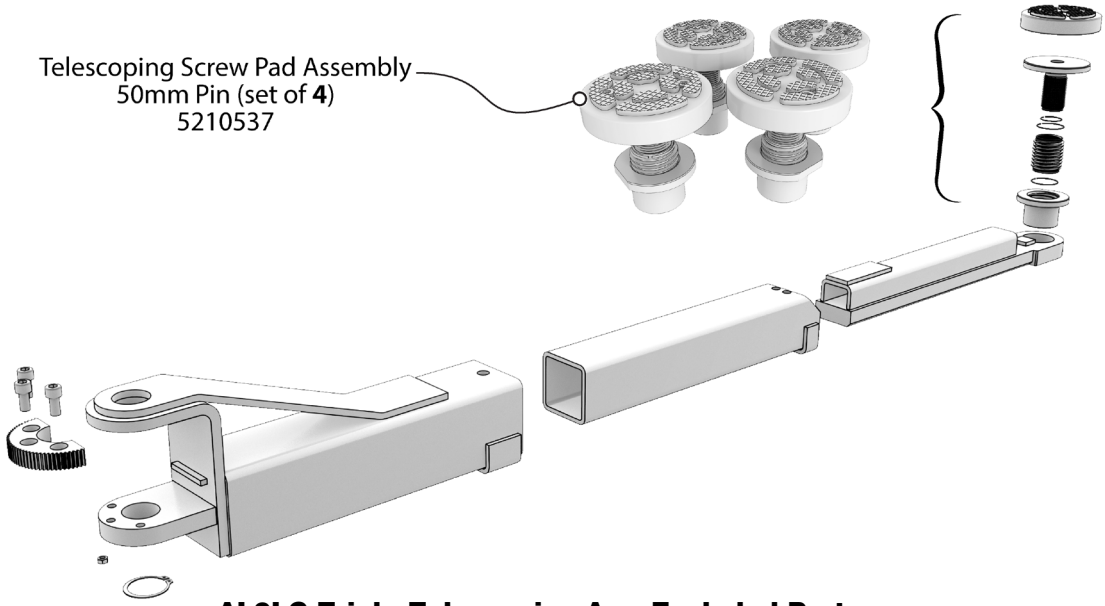

A

AL9LC Triple-Telescoping Arm Exploded Parts

X2/AL9LC

5216335

AL9LC Double-Telescoping Arm Exploded Parts

X2/AL9LC 5216336

B

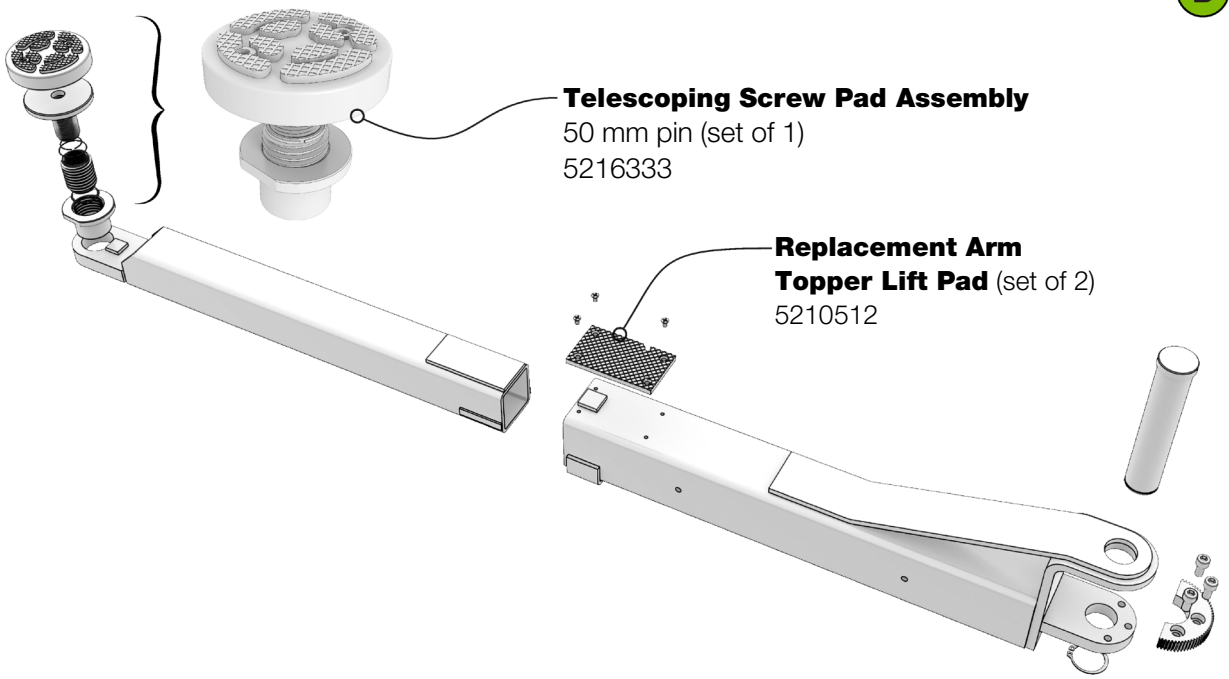

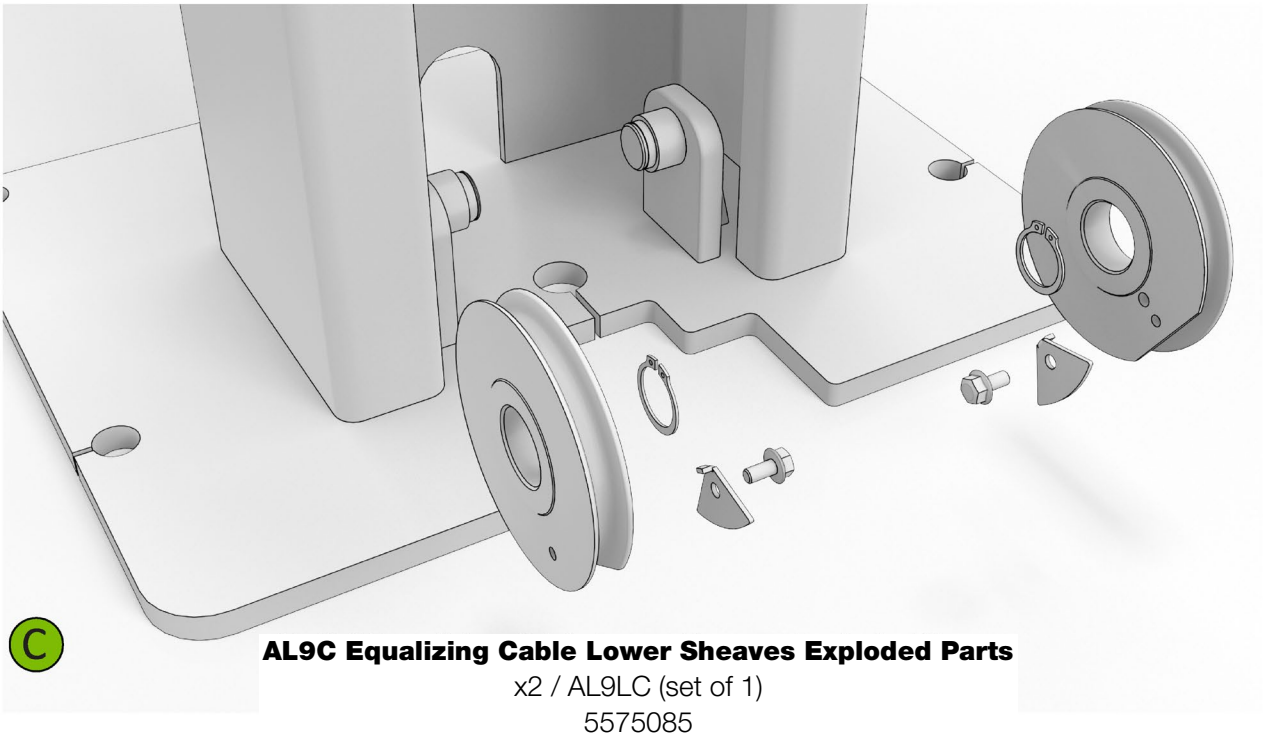

AL9C Equalizing Cable Lower Sheaves Exploded Parts
x2 / AL9LC (set of 1)
5575085

AL9C Floorplate Assembly Exploded Parts
x1 / AL9LC Lift
5211059

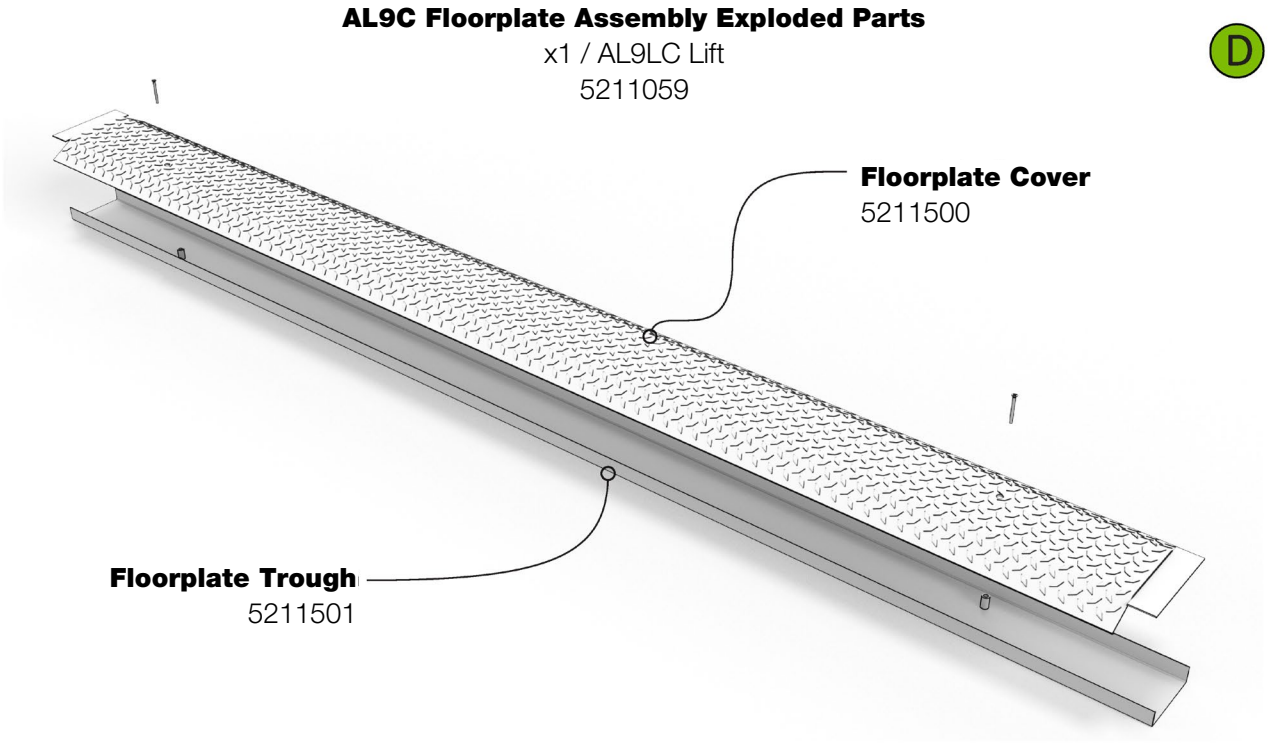

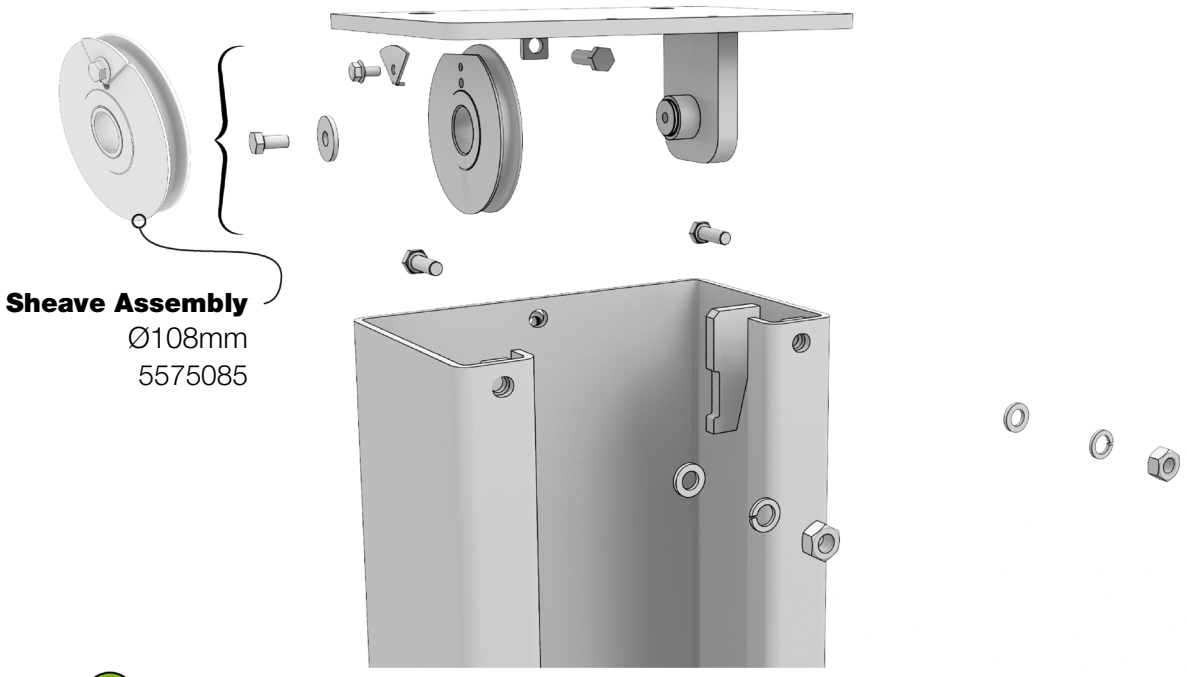

E **AL9C Equalizing Cable Upper Sheaves and Post Top Cap Exploded Parts**
x2 / AL9LC Lift

AL9C Power Unit Exploded Parts
x1 / AL9LC Lift
5585149

F

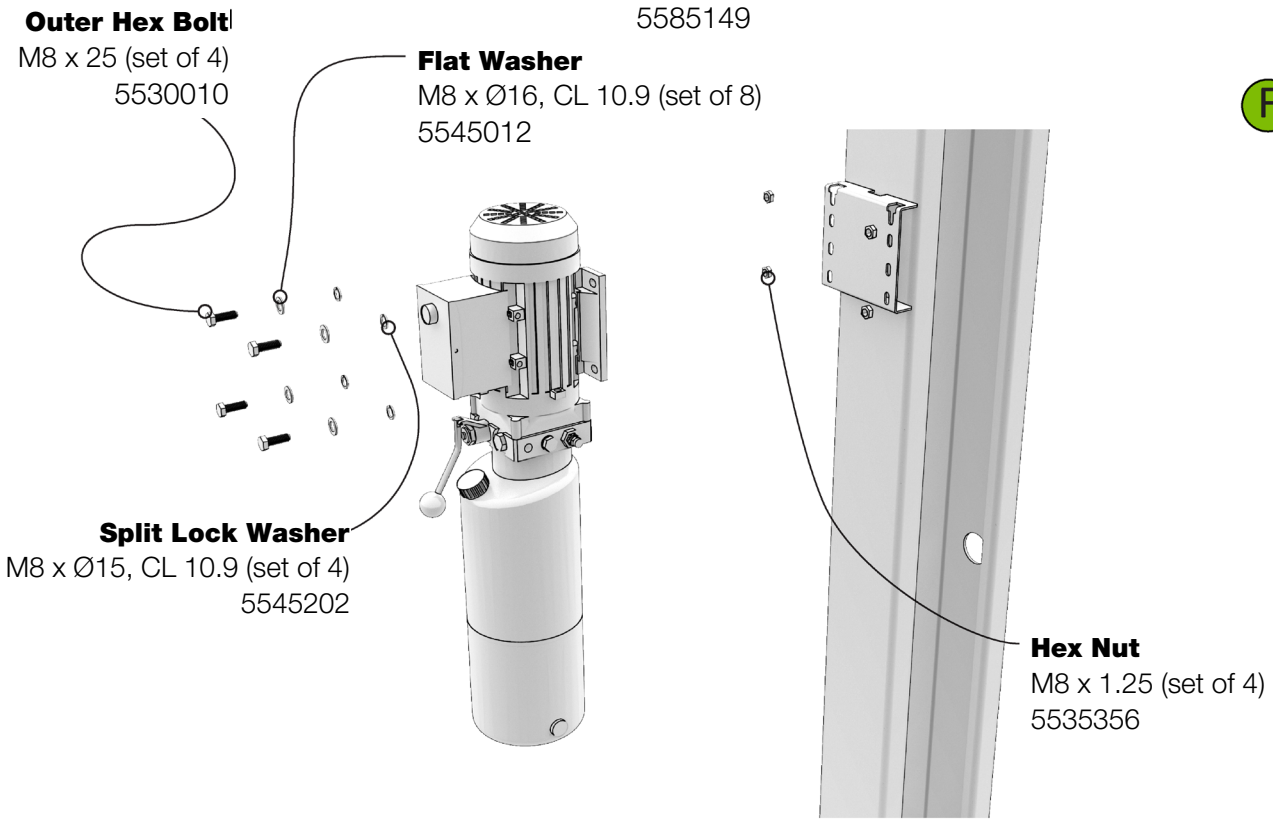

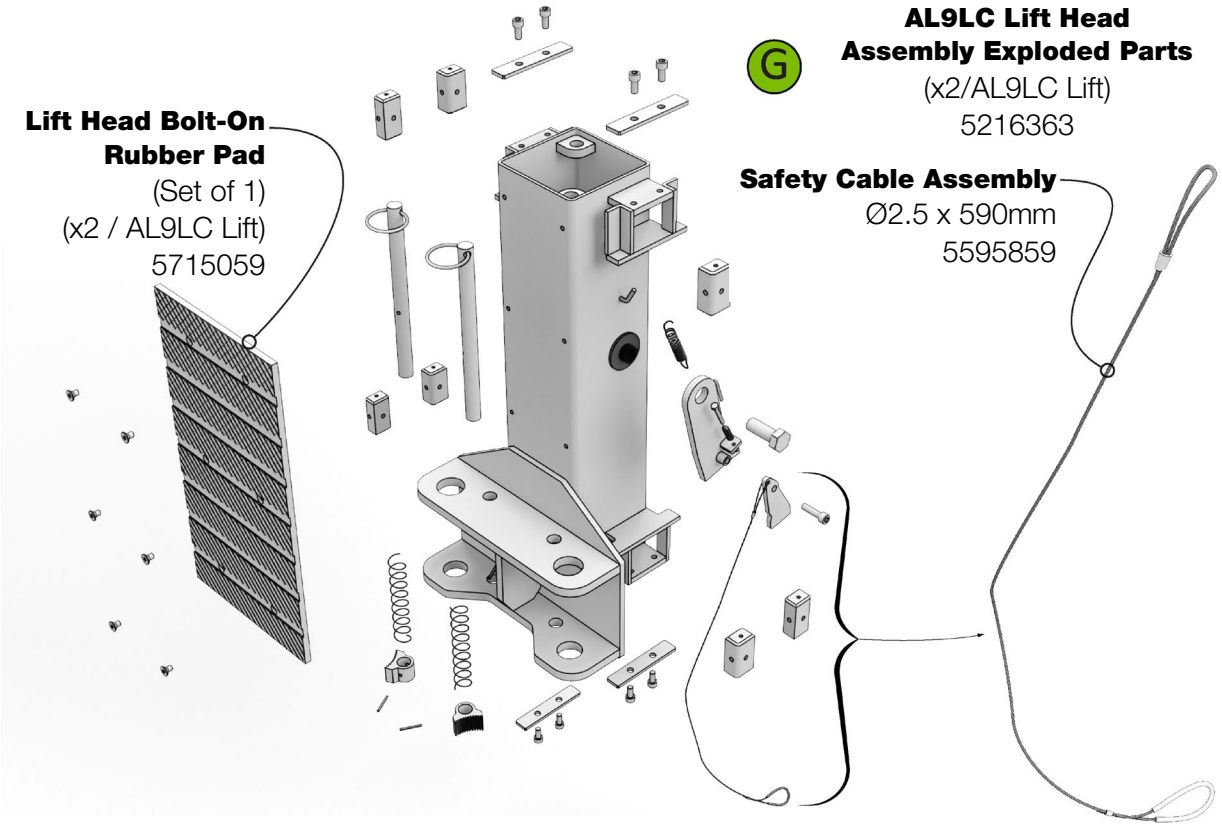

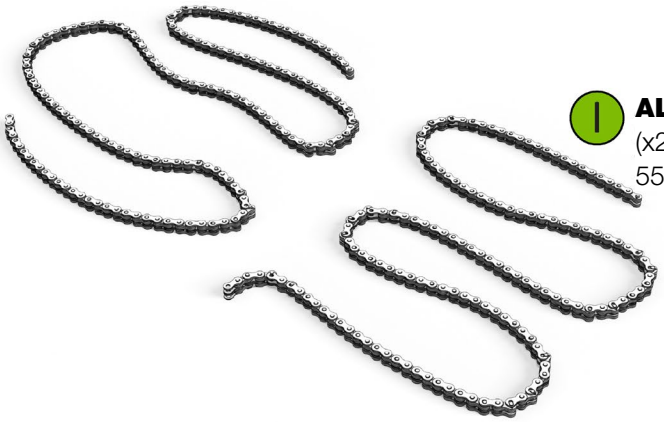

I **AL9LC Lift Chain**
(x2 / AL9LC Lift) 2250 mm length
5510668

H **AL9LC Equalizing Cables**
(x2 / AL9LC Lift)
5595867

K **AL9LC Cylinder Assembly Exploded Parts**
(x2 / AL9LC Lift)
5502068

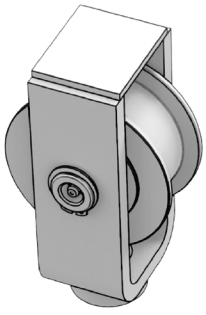

AL9LC Chain Roller Assy.
5575085

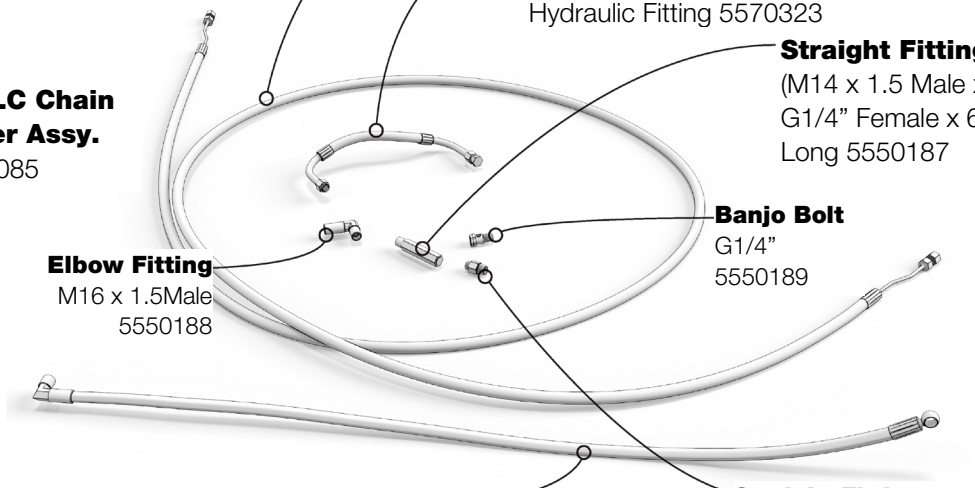

Hydraulic Hose Assembly
(Ø8 x 2890mm with Gates 4G Hydraulic Fitting 5570326

Hydraulic Hose Assembly
(Ø8 x 350mm with Gates 4G Hydraulic Fitting 5570323

Straight Fitting
(M14 x 1.5 Male x G1/4" Female x 68mm Long 5550187

Banjo Bolt
G1/4"
5550189

Elbow Fitting
M16 x 1.5Male
5550188

Hydraulic Hose Assembly
Ø8 x 1,012mm with Banjo Fitting
5570324

Straight Fitting
(M14 x 1.5 Male x M16 x 1.5 Male
5550186

AL9LC Hydraulic Hoses & Fittings **J**

Cylinder Alone
5502099

AL9LC Off Side Post Assembly
(x1 / AL9LC Lift) **M**
5602151

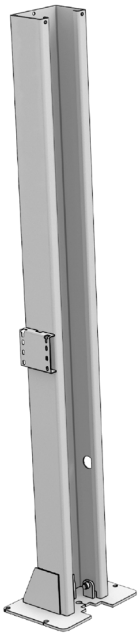

L **AL9LC Power Side Post Assembly**
(x1 / AL9LC Lift)
5602129

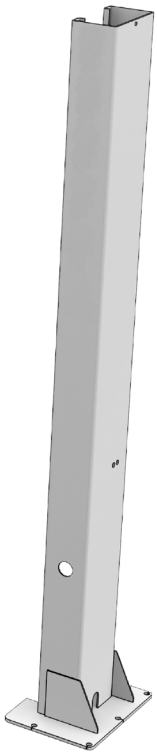

Automotive Lift Institute (ALI) Store

You probably checked the **ALI's Directory of Certified Lifts** (www.autolift.org/ali-directory-of-certified-lifts/) before making your most recent Lift purchase, but did you know the **ALI Store** (www.autolift.org/ali-store/) offers a wide variety of professional, easy-to-use, and reasonably priced training and safety materials that will make your garage a safer place to work?

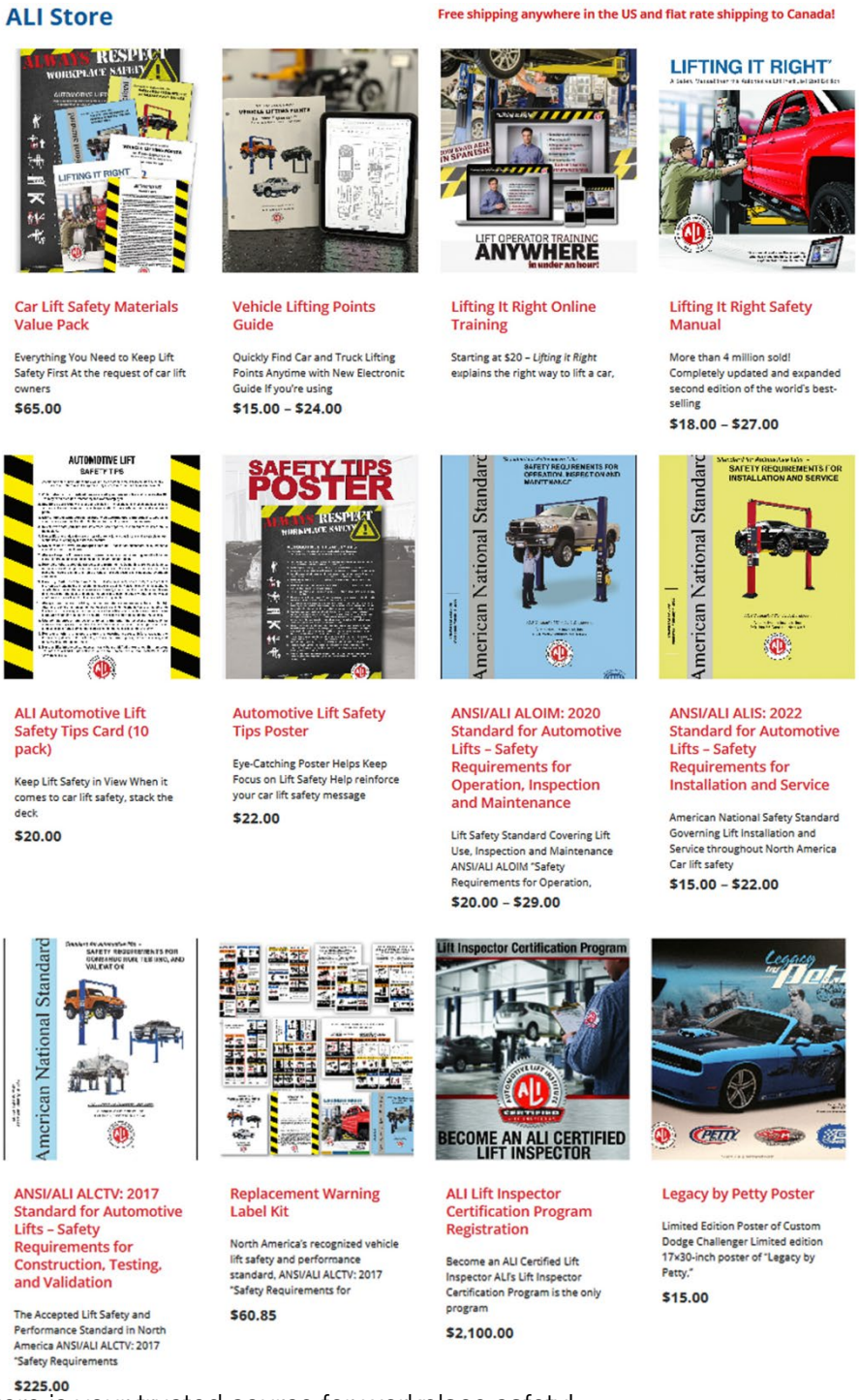

The ALI Store is your trusted source for workplace safety!

Visit today and get the training and materials you need to work safely: **www.autolift.org/ali-store/**.

Maintenance Log

30440 Agoura Rd.
Agoura Hills, CA 91301 USA

© 2025 by BendPak Inc. All rights reserved.